EANCOM® 2002 S4

PRODAT

Product data message

Edition 2016 Upd. 2021

1. Introduction 2
2. Message Structure Chart 3
3. Branching Diagram 5
4. Segments Description 12
5. Segments Layout 17
6. Example(s) 83

1. Introduction

Status

MESSAGE TYPE	: PRODAT
REFERENCE DIRECTORY	: D.01B
EANCOM® SUBSET VERSION	: 004

Definition

A Product Data message is a communication between parties containing master data, to identify and describe products available for supply or for information purposes. This information which changes infrequently does not include commercial terms and conditions but technical and functional product descriptions.

Principles

The message identifies a product or products using codes, descriptive, and other information.

The information received in a Product Data message enables the buyer to select goods according to his needs.

The following information regarding a product or products may be included in the message;

- product identifications(s);
- product characteristics;
- technical data;
- handling information.

When required, it is recommended to send free text information in structured formats.

The Product Data message can also be used by suppliers to feed a central catalogue of products, making the information available to all interested parties. In addition, interested parties may be provided with information from a central catalogue or database of products by means of the Product Data message.

2. Message Structure Chart

UNA	1	C	1	- Service string advice
UNB	2	M	1	- Interchange header
Product Data Heading Section				
UNH	3	M	1	- Message header
BGM	4	M	1	- Beginning of message
DTM	5	M	10	- Date/time/period
FTX	6	C	5	- Free text
PGI	7	C	10	- Product group information
SG1		C	10	- TRU-DTM
TRU	8	M	1	- Technical rules
DTM	9	C	1	- Date/time/period
SG3		C	99	- RFF-DTM
RFF	10	M	1	- Reference
DTM	11	C	5	- Date/time/period
SG4		C	99	- NAD-SG5-SG6
NAD	12	M	1	- Name and address
SG5		C	5	- CTA-COM
CTA	13	M	1	- Contact information
COM	14	C	10	- Communication contact
SG6		C	5	- RFF
RFF	15	M	1	- Reference
SG7		C	999	- CCI-CAV-MEA
CCI	16	M	1	- Characteristic/class id
CAV	17	C	10	- Characteristic value
MEA	18	C	10	- Measurements
Product Data Detail Section				
SG9		C	999999	- LIN-PIA-DTM-MEA-HAN-DOC-FTX-PGI-SG10-SG11-SG13-SG15-S
LIN	19	M	1	- Line item
PIA	20	C	10	- Additional product id
DTM	21	C	99	- Date/time/period
MEA	22	C	10	- Measurements
HAN	23	C	5	- Handling instructions
DOC	24	C	99	- Document/message details
FTX	25	C	99	- Free text
PGI	26	C	10	- Product group information
SG10		C	10	- IMD-FTX
IMD	27	M	1	- Item description
FTX	28	C	99	- Free text
SG11		C	10	- TRU-DTM
TRU	29	M	1	- Technical rules
DTM	30	C	1	- Date/time/period
SG13		C	10	- QTY
QTY	31	M	1	- Quantity
SG15		C	99999	- CCI-CAV-MEA
CCI	32	M	1	- Characteristic/class id
CAV	33	C	10	- Characteristic value
MEA	34	C	10	- Measurements
SG16		C	999	- ALI
ALI	35	M	1	- Additional information
SG17		C	99	- RFF-DTM
RFF	36	M	1	- Reference
DTM	37	C	5	- Date/time/period
SG18		C	99	- NAD
NAD	38	M	1	- Name and address
SG20		C	10	- DGS-QTY-FTX
DGS	39	M	1	- Dangerous goods
QTY	40	C	1	- Quantity

2. Message Structure Chart

FTX		41	C	5	- Free text
SG21			C	5	- PAC-MEA-HAN-PCI
PAC		42	M	1	- Package
MEA		43	C	10	- Measurements
HAN		44	C	5	- Handling instructions
PCI		45	C	5	- Package identification
SG23			C	999999	- HYN-PIA-QTY-SG25
HYN		46	M	1	- Hierarchy information
PIA	+	47	C	10	- Additional product id
QTY		48	C	5	- Quantity
SG25			C	99	- CCI-CAV-MEA
CCI		49	M	1	- Characteristic/class id
CAV		50	C	10	- Characteristic value
MEA		51	C	10	- Measurements

Product Data Summary Section

UNT		52	M	1	- Message trailer
UNZ		53	M	1	- Interchange trailer

3. Branching Diagram

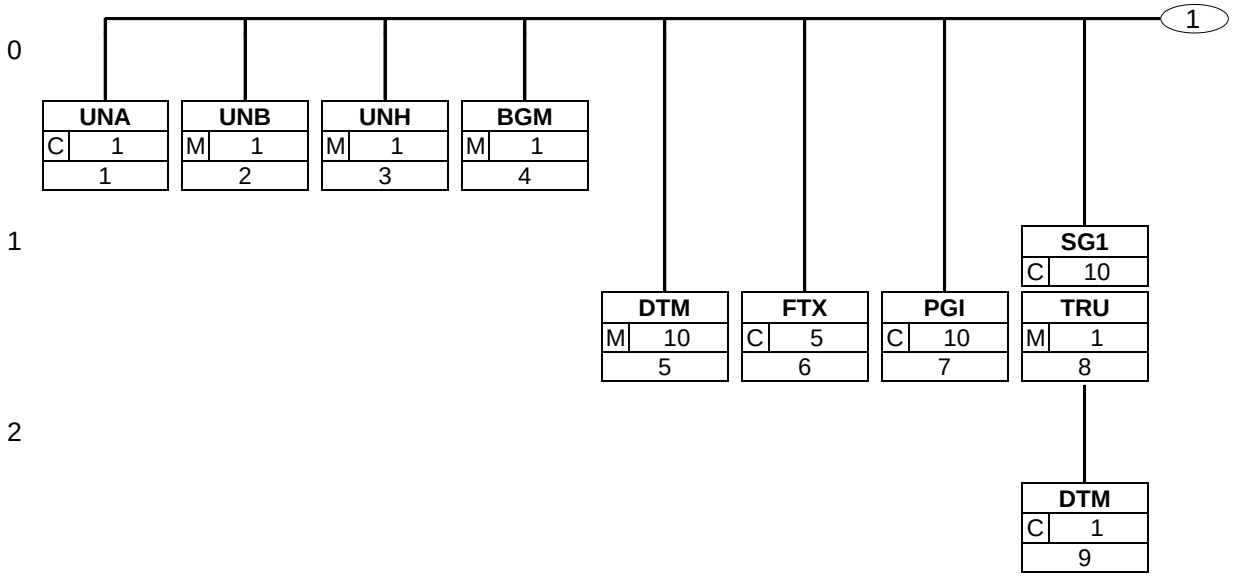

3. Branching Diagram

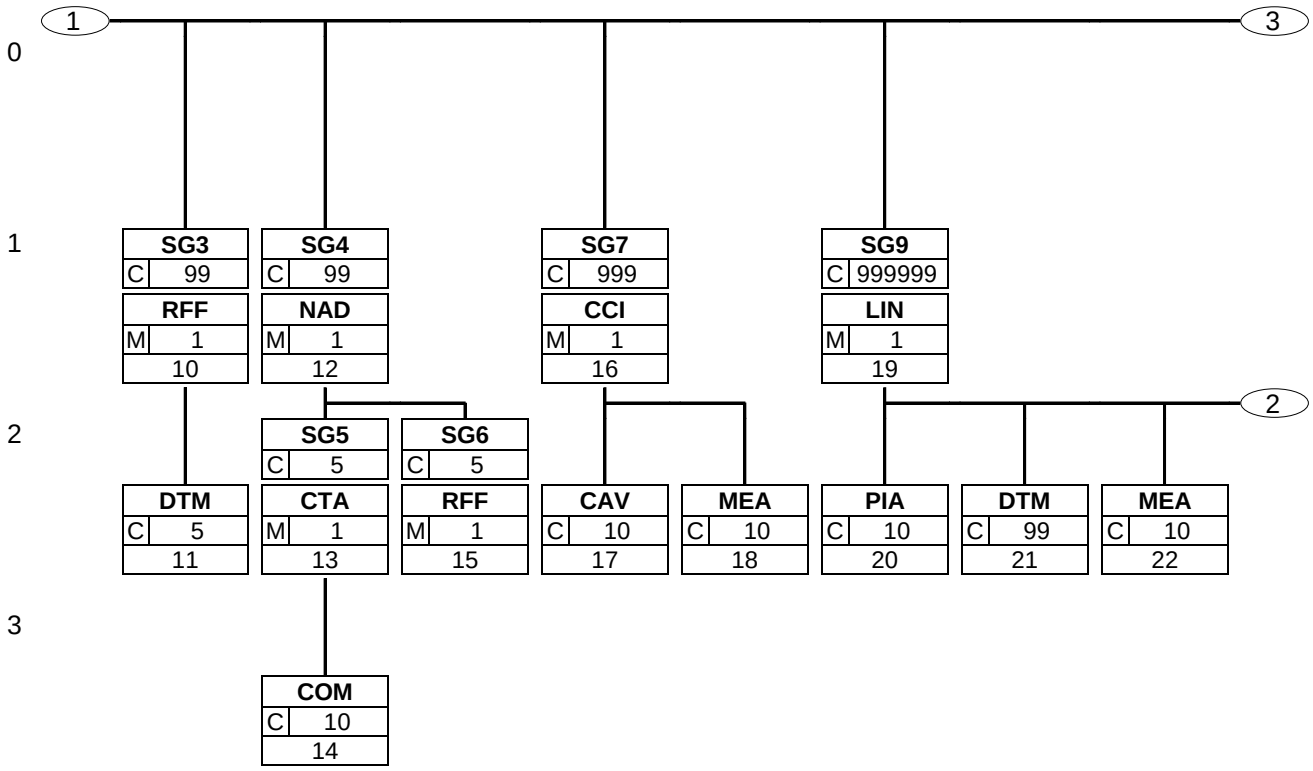

3. Branching Diagram

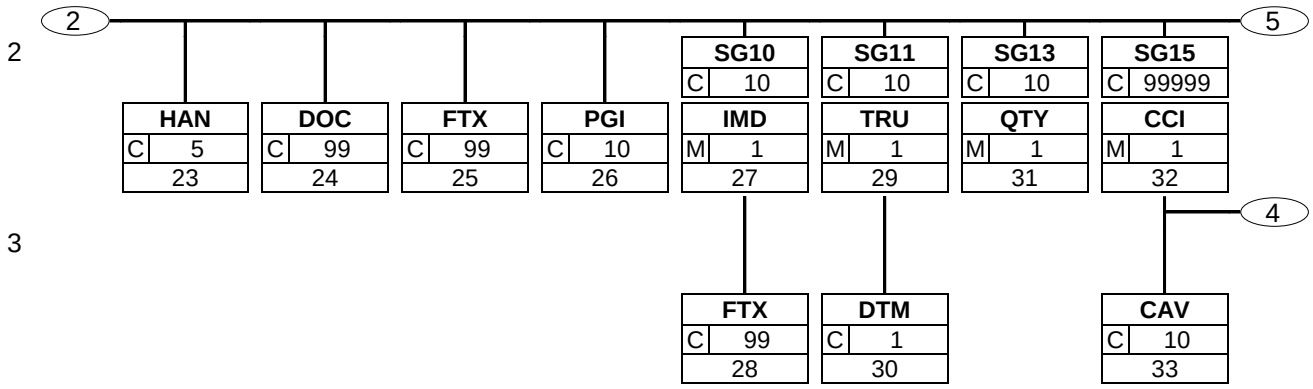

3. Branching Diagram

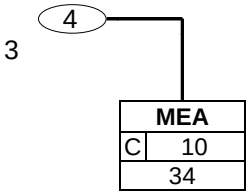

3. Branching Diagram

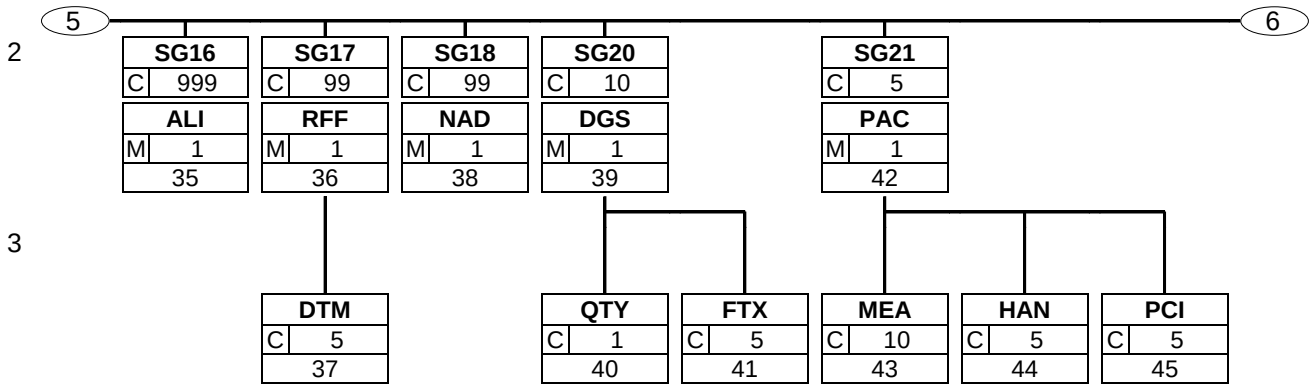

3. Branching Diagram

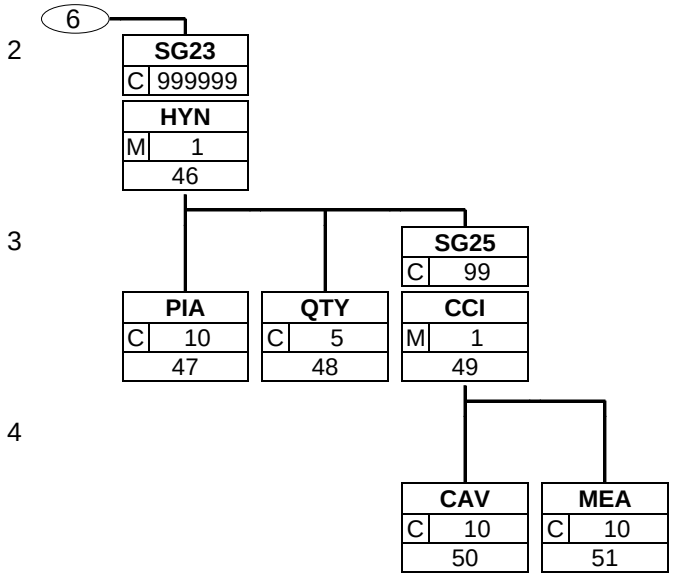

3. Branching Diagram

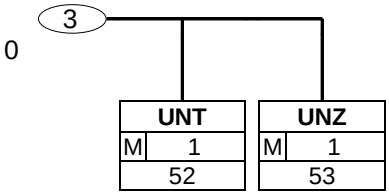

4. Segments Description

UNA - C 1 - Service string advice

This segment is used to inform the receiver of the interchange that a set of service string characters which are different to the default characters are being used.

UNB - M 1 - Interchange header

This segment is used to envelope the interchange, as well as to identify both, the party to whom the interchange is sent and the party who has sent the interchange. The principle of the UNB segment is the same as a physical envelope which covers one or more letters or documents, and which details, both the address where delivery is to take place and the address from where the envelope has come.

Product Data Heading Section

UNH - M 1 - Message header

This segment is used to head, identify and specify a message.

BGM - M 1 - Beginning of message

This segment is used to indicate the type and function of the message and to transmit the identifying number.

DTM - M 10 - Date/time/period

This segment is used to specify the date of the product data message or any dates related to the contents of the entire message.

FTX - C 5 - Free text

This segment is used to provide free form or coded text information for the entire product data message.

PGI - C 10 - Product group information

This segment is used to provide product or pricing group information which is valid for the complete message.

SG1 - C 10 - **TRU-DTM**

A group of segments to identify technical rules applicable for all products contained in the message and the rules' issue dates.

TRU - M 1 - Technical rules

This segment is used to specify any technical rules which relate to all of the products contained in the message.

DTM - C 1 - Date/time/period

This segment is used to specify the release date of the technical rules given in the previous TRU segment.

SG3 - C 99 - **RFF-DTM**

A group of segments for giving references and where necessary, their dates, relating to the whole message.

RFF - M 1 - Reference

This segment is used to specify any references which are valid for the complete message. References provided here may be overridden at line level, for that line, when the same qualifier is used.

DTM - C 5 - Date/time/period

This segment is used to specify dates relating to the references provided in the previous RFF segment.

SG4 - C 99 - **NAD-SG5-SG6**

A group of segments identifying the parties with associated information relevant to the whole message.

4. Segments Description

NAD - M 1 - Name and address

This segment is used to identify the trading partners involved in the product data message. Identification of the message sender is mandatory in the product data message.

SG5 - C 5 - **CTA-COM**

A group of segments giving contact details of a specific person and, or department within the party identified in the NAD segment.

CTA - M 1 - Contact information

This segment is used to identify a contact department or name within the party specified in the NAD segment.

COM - C 10 - Communication contact

This segment is used to provide the communications number and type of communications, for the person or department identified in the preceding CTA segment.

SG6 - C 5 - **RFF**

A group of segments used to provide references related to the party identified in the NAD segment.

RFF - M 1 - Reference

This segment is used to specify any references related to the currently identified party.

SG7 - C 999 - **CCI-CAV-MEA**

A group of segments providing common product characteristic and common characteristic details.

CCI - M 1 - Characteristic/class id

This segment is used to specify any characteristics which apply to all the products in the message.

CAV - C 10 - Characteristic value

This segment is used to further specify product characteristics which apply to all the products in the message.

MEA - C 10 - Measurements

This segment is used to specify any measurements related to the currently identified product characteristic class.

Product Data Detail Section

SG9 - C 999999 - **LIN-PIA-DTM-MEA-HAN-DOC-FTX-PGI-SG10-SG11-SG13-SG15-SG16-SG17-SG18-SG20-SG21-SG23**

A group of segments providing details of a single product.

LIN - M 1 - Line item

This segment is used to identify the line item for which product data is being provided.

PIA - C 10 - Additional product id

This segment is used to identify additional product codes for the current line item.

DTM - C 99 - Date/time/period

This segment is used to specify dates related to the current line item.

MEA - C 10 - Measurements

This segment is used to specify the physical dimensions of the current line item.

HAN - C 5 - Handling instructions

This segment is used to provide any handling instructions which are relevant to the current line item.

4. Segments Description

DOC - C 99 - Document/message details

This segment is used to identify any documentation related to the current line item, e.g. certificate of origin.

FTX - C 99 - Free text

This segment is used to provide free form or coded text information related to the current line item.

PGI - C 10 - Product group information

This segment is used to provide product or price grouping information relevant to the current line item only.

SG10 - C 10 - **IMD-FTX**

A group of segments for naming, identification and short description of the product specified within the PRODAT message line item. This group may be repeated to provide name and, or description in one or more other languages.

IMD - M 1 - Item description

This segment is used to provide the product description for the current line item.

FTX - C 99 - Free text

This segment is used to provide free form or coded text information.

SG11 - C 10 - **TRU-DTM**

A group of segments to identify technical rules applicable for the actual product and the rules' issue dates.

TRU - M 1 - Technical rules

This segment is used to specify any technical rules which relate to the current line item only.

DTM - C 1 - Date/time/period

This segment is used to specify the release date of the technical rules given in the previous TRU segment.

SG13 - C 10 - **QTY**

A group of segments to provide quantity for the specified product for example minimum delivery batch, indication of manufacturer's capacity within a given period.

QTY - M 1 - Quantity

This segment is used to specify the quantities related to the current line item, e.g. the number of consumer units in the traded unit.

SG15 - C 99999 - **CCI-CAV-MEA**

A group of segments providing product characteristic and -product characteristic details.

CCI - M 1 - Characteristic/class id

This segment is used to specify the characteristics of the current line item.

CAV - C 10 - Characteristic value

This segment is used to further specify product characteristics for the current line item.

MEA - C 10 - Measurements

This segment is used to specify any measurements related to the currently identified product characteristic class.

SG16 - C 999 - **ALI**

A group of segments providing information on origin and, or special conditions applicable to the product.

ALI - M 1 - Additional information

This segment is used to specify any special conditions applicable for the current line item.

4. Segments Description

SG17 - C 99	-	**RFF-DTM**
		A group of segments giving references related to the product specified in the LIN segment.
RFF - M 1	-	Reference
		This segment is used to specify any references related to the current line item. References stated here override references specified at header level for the current line only when the same qualifier is used.
DTM - C 5	-	Date/time/period
		This segment is used to specify dates related to the references provided in the previous RFF segment.
SG18 - C 99	-	**NAD**
		A group of segments identifying the parties with associated information.
NAD - M 1	-	Name and address
		This segment is used to identify additional parties related to the current line item only, e.g. manufacturer, distributor.
SG20 - C 10	-	**DGS-QTY-FTX**
		A group of segments containing information about dangerous goods.
DGS - M 1	-	Dangerous goods
		This segment is used to indicate whether the current line item is dangerous or hazardous. The identification of any relevant regulations concerning dangerous goods is possible in this segment.
QTY - C 1	-	Quantity
		This segment is used to specify the quantities relevant to the dangerous goods information.
FTX - C 5	-	Free text
		This segment is used to specify any additional free text information required for the dangerous goods.
SG21 - C 5	-	**PAC-MEA-HAN-PCI**
		A group of segments identifying product specific packaging of the goods identified in the line item, its physical dimensions and marks (for example special packaging relevant for the product).
PAC - M 1	-	Package
		This segment is used to describe the packaging for the currently identified line item.
MEA - C 10	-	Measurements
		This segment is used to provide measurements relevant to the packaging unit identified in the PAC segment.
HAN - C 5	-	Handling instructions
		This segment is used to provide handling instructions relevant to the packaging unit described in the PAC segment.
PCI - C 5	-	Package identification
		This segment is used to specify what marks and labels will appear on the packaging identified in the PAC segment.
SG23 - C 999999	-	**HYN-PIA-QTY-SG25**
		A group of segments to specify hierarchical connections from the given product to higher or lower levelled products.
HYN - M 1	-	Hierarchy information
		This segment is used to provide hierarchical product information related to the current line item.

4. Segments Description

PIA	- C	10	- Additional product id This segment is used to provide a promotional variant number which is part of the identification of a product.
QTY	- C	5	- Quantity This segment is used to specify quantity information related to the current hierarchical product.
SG25	- C	99	- **CCI-CAV-MEA** A group of segments to identify characteristics depending on the product's use within the specified hierarchy.
CCI	- M	1	- Characteristic/class id This segment is used to specify characteristics related to the currently identified hierarchy.
CAV	- C	10	- Characteristic value This segment is used to further specify characteristic for the current hierarchy.
MEA	- C	10	- Measurements This segment is used to specify any measurements related to the currently identified hierarchy characteristic class.

Product Data Summary Section

UNT	- M	1	- Message trailer This segment is a mandatory UN/EDIFACT segment. It must always be the last segment in the message.
UNZ	- M	1	- Interchange trailer This segment is used to provide the trailer of an interchange.

5. Segments Layout

This section describes each segment used in the EANCOM® Product data message. The original EDIFACT segment layout is listed. The appropriate comments relevant to the EANCOM® subset are indicated.

Notes:

1. The segments are presented in the sequence in which they appear in the message. The segment or segment group tag is followed by the (M)andatory / (C)onditional indicator, the maximum number of occurrences and the segment description.

2. Reading from left to right, in column one, the data element tags and descriptions are shown, followed by in the second column the EDIFACT status (M or C), the field format, and the picture of the data elements. These first pieces of information constitute the original EDIFACT segment layout.

   Following the EDIFACT information, EANCOM® specific information is provided in the third, fourth, and fifth columns. In the third column a status indicator for the use of (C)onditional EDIFACT data elements (see 2.1 through 2.3 below), in the fourth column the restricted indicator (see point 3 on the following page), and in the fifth column notes and code values used for specific data elements in the message.

2.1 (M)andatory data elements in EDIFACT segments retain their status in EANCOM®.

2.2 Additionally, there are five types of status for data elements with a (C)onditional EDIFACT status, whether for simple, component or composite data elements. These are listed below and can be identified when relevant by the following abbreviations:

- REQUIRED	**R**	Indicates that the entity is required and must be sent.
- ADVISED	**A**	Indicates that the entity is advised or recommended.
- DEPENDENT	**D**	Indicates that the entity must be sent in certain conditions, as defined by the relevant explanatory note.
- OPTIONAL	**O**	Indicates that the entity is optional and may be sent at the discretion of the user.
- NOT USED	**N**	Indicates that the entity is not used and should be omitted.

2.3 If a composite is flagged as **N, NOT USED**, all data elements within that composite will have blank status indicators assigned to them.

3. Status indicators detailed in the fourth column which directly relate to the code values detailed in the fifth **column** may have two values:

- RESTRICTED	*****	A data element marked with an asterisk (*) in the fourth column indicates that the listed codes in column five are the only codes available for use with this data element, in this segment, in this message.
- OPEN		All data elements where coded representation of data is possible and a restricted set of code values is not indicated are open (no asterisk in fourth column). The available codes are listed in the EANCOM® Data Elements and Code Sets Directory. Code values may be given as examples or there may be a note on the format or type of code to be used.

4. Different colours are used for the code values in the segment details: restricted codes are in red and open codes in blue.

5. Segments Layout

Segment number: 1

UNA	- C	1 - Service string advice

Function:

The service string advice shall begin with the upper case characters UNA immediately followed by six characters in the order shown below. The space character shall not be used in positions 010, 020, 040, 050 or 060. The same character shall not be used in more than one position of the UNA.

		EDIFACT	GS1	*	Description
UNA1	Component data element separator	M an1	**M**	*	Used as a separator between component data elements contained within a composite data element (default value: ":")
UNA2	Data element separator	M an1	**M**	*	Used to separate two simple or composite data elements (default value: "+")
UNA3	Decimal mark	M an1	**M**	*	Used to indicate the character used for decimal notation (default value:".")
UNA4	Release character	M an1	**M**	*	Used to restore any service character to its original specification (value: "?").
UNA5	Repetition separator	M an1	**M**	*	Used to indicate the character used for repetition separation (value: " * ").
UNA6	Segment terminator	M an1	**M**	*	Used to indicate the end of segment data (default value: " ' ")

Segment Notes:

This segment is used to inform the receiver of the interchange that a set of service string characters which are different to the default characters are being used.
When using the default set of service characters, the UNA segment need not be sent. If it is sent, it must immediately precede the UNB segment and contain the four service string characters (positions UNA1, UNA2, UNA4 and UNA6) selected by the interchange sender.
Regardless of whether or not all of the service string characters are being changed every data element within this segment must be filled, (i.e., if some default values are being used with user defined ones, both the default and user defined values must be specified).
When expressing the service string characters in the UNA segment, it is not necessary to include any element separators.
The use of the UNA segment is required when using a character set other than level A.
UNA:+.?*'

5. Segments Layout

Segment number: 2

UNB - M 1 - Interchange header

Function:

To identify an interchange.

Notes:
1. S001/0002, shall be '4' to indicate this version of the syntax.
2. The combination of the values carried in data elements S002, S003 and 0020 shall be used to identify uniquely the interchange, for the purpose of acknowledgement.

		EDIFACT	GS1	*	Description
S001	SYNTAX IDENTIFIER	M	**M**		See Part I chapter 5.2.7 and segment notes.
0001	Syntax identifier	M a4	**M**	*	UNOA = UN/ECE level A UNOB = UN/ECE level B UNOC = UN/ECE level C UNOD = UN/ECE level D UNOE = UN/ECE level E UNOF = UN/ECE level F UNOG = UN/ECE level G UNOH = UN/ECE level H UNOI = UN/ECE level I UNOJ = UN/ECE level J UNOK = UN/ECE level K UNOW = UN/ECE level W UNOX = UN/ECE level X UNOY = UN/ECE level Y
0002	Syntax version number	M an1	**M**	*	4 = Version 4
0080	Service code list directory version number	C an..6	**N**		
0133	Character encoding, coded	C an..3	**N**		
S002	INTERCHANGE SENDER	M	**M**		
0004	Interchange sender identification	M an..35	**M**		GLN (n13)
0007	Identification code qualifier	C an..4	**R**	*	14 = GS1
0008	Interchange sender internal identification	C an..35	**O**		
0042	Interchange sender internal sub-identification	C an..35	**N**		
S003	INTERCHANGE RECIPIENT	M	**M**		
0010	Interchange recipient identification	M an..35	**M**		GLN (n13)
0007	Identification code qualifier	C an..4	**R**	*	14 = GS1
0014	Interchange recipient internal identification	C an..35	**O**		
0046	Interchange recipient internal sub-identification	C an..35	**N**		
S004	DATE AND TIME OF PREPARATION	M	**M**		
0017	Date	M n8	**M**		CCYYMMDD
0019	Time	M n4	**M**		HHMM
0020	Interchange control reference	M an..14	**M**		Unique reference identifying the interchange. Created

5. Segments Layout

Segment number: 2

		EDIFACT	GS1	*	Description
					by the interchange sender.
S005	RECIPIENT REFERENCE/ PASSWORD DETAILS	C	**O**		
0022	Recipient reference/password	M an..14	**M**		
0025	Recipient reference/password qualifier	C an2	**O**		
0026	Application reference	C an..14	**O**		Message identification if the interchange contains only one type of message.
0029	Processing priority code	C a1	**O**		A = Highest priority
0031	Acknowledgement request	C n1	**O**		1 = Requested
0032	Interchange agreement identifier	C an..35	**O**	*	EANCOM.....
0035	Test indicator	C n1	**O**		1 = Interchange is a test

Segment Notes:

This segment is used to envelope the interchange, as well as to identify both, the party to whom the interchange is sent and the party who has sent the interchange. The principle of the UNB segment is the same as a physical envelope which covers one or more letters or documents, and which details, both the address where delivery is to take place and the address from where the envelope has come.
S001: The character encoding specified in basic code table of ISO/IEC 646 (7-bit coded character set for information interchange) shall be used for the interchange service string advice (if used) and up to and including the composite data element S001 'Syntax identifier' in the interchange header. The character repertoire used for the characters in an interchange shall be identified from the code value of data element 0001 in S001 'Syntax identifier' in the interchange header. The character repertoire identified does not apply to objects and/or encrypted data.
The default encoding technique for a particular repertoire shall be the encoding technique defined by its associated character set specification.
DE 0001: The recommended (default) character set for use in EANCOM® for international exchanges is character set A (UNOA). Should users wish to use character sets other than A, an agreement on which set to use should be reached on a bilateral basis before communications begin.
DE 0004, 0008, 0010 and 0014: Within EANCOM® the use of the Global Location Number (GLN) is recommended for the identification of the interchange sender and recipient.
DE 0008: Identification (e.g. a division) specified by the sender of the interchange, to be included if agreed, by the recipient in response interchanges, to facilitate internal routing.
DE 0014: The address for routing, provided beforehand by the interchange recipient, is used by the interchange sender to inform the recipient of the internal address, within the latter's systems, to which the interchange should be routed. It is recommended that the GLN be used for this purpose.
DE 0007: Identification (e.g. a division) specified by the recipient of the interchange, to be included if agreed, by the sender in response interchanges, to facilitate internal routing.
DE S004: The date and time specified in this composite should be the date and time at which the interchange sender prepared the interchange. This date and time may not necessarily be the same as the date and time of contained messages.
DE 0020: The interchange control reference number is generated by the interchange sender and is used to identify uniquely each interchange. Should the interchange sender wish to re-use interchange control reference numbers, it is recommended that each number be preserved for at least a period of three months before being re-used. In order to guarantee uniqueness, the interchange control reference number should always be linked to the interchange sender's identification (DE 0004).
DE S005: The use of passwords must first be agreed bilaterally by the parties exchanging the interchange.
DE 0026: This data element is used to identify the application, on the interchange recipient's system, to which the interchange is directed. This data element may only be used if the interchange contains only one type of message, (e.g. only invoices). The reference used in this data element is assigned by the interchange sender.
DE 0031: This data element is used to indicate whether an acknowledgement to the interchange is required. The EANCOM® APERAK or CONTRL message should be used to provide acknowledgement of interchange receipt. In addition, the EANCOM® CONTRL message may be used to indicate when an interchange has been rejected

5. Segments Layout

Segment number: 2

due to syntax errors.
DE 0032: This data element is used to identify any underlying agreements which control the exchange of data. Within EANCOM® , the identity of such agreements must start with the letters 'EANCOM', the remaining characters within the data element being filled according to bilateral agreements.

UNB+UNOC:4+5412345678908:14+8798765432106:14+20020102:1000+12345555+++++EANCOMREF 52'

5. Segments Layout

Segment number: 3

UNH - M 1 - Message header

Function:

To head, identify and specify a message.

Notes:
1. Data element S009/0057 is retained for upward compatibility. The use of S016 and/or S017 is encouraged in preference.
2. The combination of the values carried in data elements 0062 and S009 shall be used to identify uniquely the message within its group (if used) or if not used, within its interchange, for the purpose of acknowledgement.

		EDIFACT	GS1	*	Description
0062	Message reference number	M an..14	**M**		Senders unique message reference. Sequence number of the messages in the interchange. DE 0062 in the UNT will be identical. Sender generated.
S009	MESSAGE IDENTIFIER	M	**M**		
0065	Message type	M an..6	**M**	*	PRODAT = Product data message
0052	Message version number	M an..3	**M**	*	D = Draft version/UN/EDIFACT Directory
0054	Message release number	M an..3	**M**	*	01B = Release 2001 - B
0051	Controlling agency, coded	M an..3	**M**	*	UN = UN/CEFACT
0057	Association assigned code	C an..6	**R**	*	EAN004 = GS1 version control number (GS1 Permanent Code) Indicates that the message is the EANCOM version 004 of the UNSM Product Data.
0110	Code list directory version number	C an..6	**O**		This data element can be used to identify the codelist agreed by the interchange partners, e.g. EAN001 = EANCOM 2002 S4 codelist released on 01.12.2002 by GS1.
0113	Message type sub-function identification	C an..6	**N**		
0068	Common access reference	C an..35	**N**		
S010	STATUS OF THE TRANSFER	C	**N**		
0070	Sequence of transfers	M n..2			
0073	First and last transfer	C a1			
S016	MESSAGE SUBSET IDENTIFICATION	C	**N**		
0115	Message subset identification	M an..14			
0116	Message subset version number	C an..3			
0118	Message subset release number	C an..3			
0051	Controlling agency, coded	C an..3			
S017	MESSAGE IMPLEMENTATION GUIDELINE IDENTIFICATION	C	**N**		
0121	Message implementation guideline identification	M an..14			
0122	Message implementation guideline version number	C an..3			
0124	Message implementation	C an..3			

5. Segments Layout

Segment number: 3

		EDIFACT	GS1	*	Description
	guideline release number				
0051	Controlling agency, coded	C an..3			
S018	SCENARIO IDENTIFICATION	C	**N**		
0127	Scenario identification	M an..14			
0128	Scenario version number	C an..3			
0130	Scenario release number	C an..3			
0051	Controlling agency, coded	C an..3			

Segment Notes:

This segment is used to head, identify and specify a message.
DE's 0065, 0052, and 0054: Indicates that the message is a UNSM Product Data message based on the EDIFACT D.01B directory.

Example:
UNH+ME000001+PRODAT:D:01B:UN:EAN004'

5. Segments Layout

Segment number: 4

BGM	- M	1 - Beginning of message			
Function: To indicate the type and function of a message and to transmit the identifying number.					
		EDIFACT	GS1	*	Description
C002	DOCUMENT/MESSAGE NAME	C	**R**		
1001	Document name code	C an..3	**R**	*	289 = Product data message 721 = Product data response
1131	Code list identification code	C an..17	**N**		
3055	Code list responsible agency code	C an..3	**D**	*	9 = GS1
1000	Document name	C an..35	**O**		
C106	DOCUMENT/MESSAGE IDENTIFICATION	C	**R**		
1004	Document identifier	C an..35	**R**		Product data message number assigned by the document sender. For global unique identification of documents Global Document Type Identifier (GDTI) is available.
1056	Version identifier	C an..9	**N**		
1060	Revision identifier	C an..6	**N**		
1225	Message function code	C an..3	**R**	*	2 = Addition 3 = Deletion 4 = Change 5 = Replace 6 = Confirmation 9 = Original 16 = Proposal The message function, coded is a critical data element in this segment. It applies to all data indicated in the message. The following definitions apply for the restricted codes: 2 = Addition (DE 1229 in LIN is 1 = Addition). This code is used to add new or to provide information on existing products for the first time to the trading partner. 3 = Deletion (DE 1229 in LIN is 2 = Deletion). This code is used to delete products from a partner's master file. In the case of deletion, only the LIN segment needs to be sent in the detail section. 4 = Change (DE 1229 in LIN is 3 = Change). This code is used to modify any information relevant to a product already known by the trading partner. Only the segments containing modified information needs to be sent. All previously sent data in a modified segment must be provided. All occurrences (repetitions) of a modified segment must be provided (whether modified or not). 5 = Replace - To replace a previously sent message identified in the RFF segment of the heading section. 6 = Confirmation (DE 1229 in LIN is 4 = No Change). This code is used when product information contained in a previous transmission is sent again for confirmation purposes. 9 = Original - An original transmission of a Product

5. Segments Layout

Segment number: 4

	EDIFACT	GS1	*	Description
				Data. 16 = Proposal - A proposed or suggested Product Data.
4343 Response type code	C an..3	**O**		

Segment Notes:

This segment is used to indicate the type and function of the message and to transmit the identifying number. All references other than the document number DE 1004 are to be put in the RFF segment (SG3).

Example:
BGM+289+87441+2'

5. Segments Layout

Segment number: 5

DTM	- M	10 - Date/time/period			
Function: To specify date, and/or time, or period.					
		EDIFACT	GS1	*	Description
C507	DATE/TIME/PERIOD	M	**M**		
2005	Date or time or period function code qualifier	M an..3	**M**	*	64 = Delivery date/time, earliest 137 = Document/message date/time 157 = Validity start date 273 = Validity period 382 = Earliest sale date 799 = Validity end date
2380	Date or time or period value	C an..35	**R**		
2379	Date or time or period format code	C an..3	**R**		102 = CCYYMMDD 203 = CCYYMMDDHHMM 718 = CCYYMMDD-CCYYMMDD

Segment Notes:

This segment is used to specify the date of the product data message or any dates related to the contents of the entire message.
DE 2005: Identification of the 'Document/message date/time' (code value 137) is mandatory in an EANCOM message.

Example:
DTM+137:20020615:102'
DTM+273:2002061520020914:718'

5. Segments Layout

Segment number: 6

FTX	- C	5 - Free text			
Function: To provide free form or coded text information.					
		EDIFACT	GS1	*	Description
4451	Text subject code qualifier	M an..3	**M**		AAI = General information SIN = Special instructions SUR = Supplier remarks ZZZ = Mutually defined
4453	Free text function code	C an..3	**O**	*	1 = Text for subsequent use
C107	TEXT REFERENCE	C	**D**		This composite is only used when trading partners have agreed to use mutually defined code values.
4441	Free text value code	M an..17	**M**		001 = Reference to standard text between trading partners.
1131	Code list identification code	C an..17	**O**		
3055	Code list responsible agency code	C an..3	**D**		91 = Assigned by supplier or supplier's agent 92 = Assigned by buyer or buyer's agent
C108	TEXT LITERAL	C	**D**		This composite is only used if coded text can not be used.
4440	Free text value	M an..512	**M**		
4440	Free text value	C an..512	**O**		
4440	Free text value	C an..512	**O**		
4440	Free text value	C an..512	**O**		
4440	Free text value	C an..512	**O**		
3453	Language name code	C an..3	**D**		ISO 639 two alpha code This data element is only used when non coded free text has been provided in data element C108.
4447	Free text format code	C an..3	**N**		

Segment Notes:

This segment is used to provide free form or coded text information for the entire product data message.
Use of this segment in free form is not recommended since it may inhibit automatic processing of the product data message. Coded references to standard texts is an available functionality which enables automatic processing and reduces transmission and processing overheads. Standard texts should be mutually defined between trading partners and can be used to cover legal or other requirements.

Example:
FTX+SUR+++COMPLETE HOUSEHOLD DETERGENTS RANGE'
This example is used by the message sender to indicate that the complete range of household detergents are included in the message.

5. Segments Layout

Segment number: 7

PGI	- C	10 - Product group information			
Function: To indicate the group in which a product belongs.					
		EDIFACT	GS1	*	Description
5379	Product group type code	M an..3	**M**	*	3 = Catalogue 4 = Group of products with same price 11 = Product group
C288	PRODUCT GROUP	C	**O**		
5389	Product group name code	C an..25	**O**		This data element is used to provide the identification of a product group. Identification numbers provided here may be allocated on a bi-lateral basis between trading partners.
1131	Code list identification code	C an..17	**O**		
3055	Code list responsible agency code	C an..3	**D**		91 = Assigned by supplier or supplier's agent 92 = Assigned by buyer or buyer's agent
5388	Product group name	C an..35	**O**		
Segment Notes: This segment is used to provide product or pricing group information which is valid for the complete message. Example: PGI+11+:::DAIRY FOODS'					

5. Segments Layout

Segment number: 8

SG1	- C	10	-	TRU-DTM
TRU	- M	1	-	Technical rules

Function:

A segment specifying technical rules.

		EDIFACT	GS1	*	Description
7402	Object identifier	M an..35	**M**		
1056	Version identifier	C an..9	**O**		
1058	Release identifier	C an..9	**O**		
7175	Rule part identifier	C an..7	**O**		
3055	Code list responsible agency code	C an..3	**O**		5 = ISO (International Organization for Standardization) 403 = Comite Europeen de Normalisation

Segment Notes:

This segment is used to specify any technical rules which relate to all of the products contained in the message.

Example:
TRU+9001+2+1+4+5'
Part 4 of the technical rule 9001, version 2, release 1, issued by ISO.

5. Segments Layout

Segment number: 9

SG1	- C	10 -	TRU-DTM
DTM	- C	1 -	Date/time/period

Function:

To specify date, and/or time, or period.

		EDIFACT	GS1	*	Description
C507	DATE/TIME/PERIOD	M	**M**		
2005	Date or time or period function code qualifier	M an..3	**M**		261 = Release date/time
2380	Date or time or period value	C an..35	**R**		
2379	Date or time or period format code	C an..3	**R**		102 = CCYYMMDD 203 = CCYYMMDDHHMM 718 = CCYYMMDD-CCYYMMDD

Segment Notes:

This segment is used to specify the release date of the technical rules given in the previous TRU segment.

Example:
DTM+261:20021015:102'

5. Segments Layout

Segment number: 10

SG3	- C	99	-	RFF-DTM
RFF	- M	1	-	Reference

Function:

To specify a reference.

		EDIFACT	GS1	*	Description
C506	REFERENCE	M	**M**		
1153	Reference code qualifier	M an..3	**M**		ASV = Product data file number AXF = Product inquiry number CR = Customer reference number CT = Contract number PL = Price list number Code value ASV is used to give a reference number to a previous product data file. Code value PIE is used to give reference number identifying a previously communicated product inquiry number.
1154	Reference identifier	C an..70	**R**		
1156	Document line identifier	C an..6	**N**		
4000	Reference version identifier	C an..35	**N**		
1060	Revision identifier	C an..6	**N**		

Segment Notes:

This segment is used to specify any references which are valid for the complete message. References provided here may be overridden at line level, for that line, when the same qualifier is used.

Example:
RFF+CR:12332'

5. Segments Layout

Segment number: 11

SG3	- C	99	-	RFF-DTM
DTM	- C	5	-	Date/time/period

Function:

To specify date, and/or time, or period.

		EDIFACT	GS1	*	Description
C507	DATE/TIME/PERIOD	M	**M**		
2005	Date or time or period function code qualifier	M an..3	**M**	*	171 = Reference date/time
2380	Date or time or period value	C an..35	**R**		
2379	Date or time or period format code	C an..3	**R**		102 = CCYYMMDD 203 = CCYYMMDDHHMM 718 = CCYYMMDD-CCYYMMDD

Segment Notes:

This segment is used to specify dates relating to the references provided in the previous RFF segment.

Example:
DTM+171:20020202:102'

5. Segments Layout

Segment number: 12

SG4	- C	99 -	NAD-SG5-SG6
NAD	- M	1 -	Name and address

Function:

To specify the name/address and their related function, either by C082 only and/or unstructured by C058 or structured by C080 thru 3207.

		EDIFACT	GS1	*	Description
3035	Party function code qualifier	M an..3	**M**		BY = Buyer GX = Central catalogue party SN = Store number SR = Supplier's agent/representative SU = Supplier
C082	PARTY IDENTIFICATION DETAILS	C	**A**		
3039	Party identifier	M an..35	**M**		For identification of parties it is recommended to use GLN - Format n13.
1131	Code list identification code	C an..17	**N**		
3055	Code list responsible agency code	C an..3	**R**	*	9 = GS1
C058	NAME AND ADDRESS	C	**O**		This composite may only be used to fulfill the requirements of directive 2003/58/EC, article 4.
3124	Name and address description	M an..35	**M**		
3124	Name and address description	C an..35	**O**		
3124	Name and address description	C an..35	**O**		
3124	Name and address description	C an..35	**O**		
3124	Name and address description	C an..35	**O**		
C080	PARTY NAME	C	**D**		
3036	Party name	M an..35	**M**		Party Name in clear text.
3036	Party name	C an..35	**O**		
3036	Party name	C an..35	**O**		
3036	Party name	C an..35	**O**		
3036	Party name	C an..35	**O**		
3045	Party name format code	C an..3	**O**		
C059	STREET	C	**D**		
3042	Street and number or post office box identifier	M an..35	**M**		Building Name/Number and Street
3042	Street and number or post office box identifier	C an..35	**O**		Name and/or P.O. Box
3042	Street and number or post office box identifier	C an..35	**O**		
3042	Street and number or post office box identifier	C an..35	**O**		
3164	City name	C an..35	**D**		City/Town, clear text.
C819	COUNTRY SUB-ENTITY DETAILS	C	**D**		
3229	Country sub-entity name code	C an..9	**O**		

5. Segments Layout

Segment number: 12

		EDIFACT	GS1	*	Description
1131	Code list identification code	C an..17	**O**		
3055	Code list responsible agency code	C an..3	**O**		
3228	Country sub-entity name	C an..70	**O**		County/State, clear text.
3251	Postal identification code	C an..17	**D**		Postal Code
3207	Country name code	C an..3	**D**		ISO 3166 two alpha code

Segment Notes:

This segment is used to identify the trading partners involved in the product data message. Identification of the message sender is mandatory in the product data message.
In addition, if it exists, it is recommended that the identification of the message recipient is provided.

Example:
NAD+SU+5071615111110::9'
NAD+BY+5098765111111::9'

Dependency Notes:
The following composites and data elements are only used when a coded name and address can not be used.
The affected composites and data elements are as follows:
C080 - C059 - 3164 - C819 - 3251 - 3207

5. Segments Layout

Segment number: 13

SG4	- C	99 -	NAD-SG5-SG6
SG5	- C	5 -	CTA-COM
CTA	- M	1 -	Contact information

Function:

To identify a person or a department to whom communication should be directed.

		EDIFACT	GS1	*	Description
3139	Contact function code	C an..3	**R**		OC = Order contact SA = Sales administration
C056	DEPARTMENT OR EMPLOYEE DETAILS	C	**O**		
3413	Department or employee name code	C an..17	**O**		
3412	Department or employee name	C an..35	**O**		

Segment Notes:

This segment is used to identify a contact department or name within the party specified in the NAD segment. The use of Global Location Number is particularly suitable for this purpose.

Example:
CTA+OC+:W MILLS'
The person to contact, within the company identified, to handle issues relating to orders is W Mills.

CTA+SA+5412345000006'
The sales administration contact is identified by means of the Global Location Number 5412345000006.

5. Segments Layout

Segment number: 14

SG4	- C	99 -	NAD-SG5-SG6
SG5	- C	5 -	CTA-COM
COM	- C	10 -	Communication contact

Function:

To identify a communication number of a department or a person to whom communication should be directed.

		EDIFACT	GS1	*	Description
C076	COMMUNICATION CONTACT	M	**M**		
3148	Communication address identifier	M an..512	**M**		
3155	Communication address code qualifier	M an..3	**M**		AO = Uniform Resource Location (URL) EI = EDI EM = Electronic mail TE = Telephone

Segment Notes:

This segment is used to provide the communications number and type of communications, for the person or department identified in the preceding CTA segment.

Example:
COM+004461879523:FX'

5. Segments Layout

Segment number: 15

SG4	- C	99	-	NAD-SG5-SG6
SG6	- C	5	-	RFF
RFF	- M	1	-	Reference

Function:

To specify a reference.

		EDIFACT	GS1	*	Description
C506	REFERENCE	M	**M**		
1153	Reference code qualifier	M an..3	**M**	*	AVB = Product characteristics directory FC = Fiscal number GN = Government reference number VA = VAT registration number YC1 = Additional party identification (GS1 Temporary Code)
1154	Reference identifier	C an..70	**R**		
1156	Document line identifier	C an..6	**N**		
4000	Reference version identifier	C an..35	**O**		
1060	Revision identifier	C an..6	**N**		

Segment Notes:

This segment is used to specify any references related to the currently identified party.

Example:
RFF+GN:IRL5524'

5. Segments Layout

Segment number: 16

SG7	- C	999	-	CCI-CAV-MEA
CCI	- M	1	-	Characteristic/class id

Function:

To identify and describe a specific characteristic and its relevance for subsequent business processes.

		EDIFACT	GS1	*	Description
7059	Class type code	C an..3	**O**		11 = Product
C502	MEASUREMENT DETAILS	C	**N**		
6313	Measured attribute code	C an..3	**O**		
6321	Measurement significance code	C an..3			
6155	Non-discrete measurement name code	C an..17			
6154	Non-discrete measurement name	C an..70			
C240	PRODUCT CHARACTERISTIC	C	**O**		
7037	Characteristic description code	M an..17	**M**		This data element is used to identify the characteristics of a line item in user coded form. As no EDIFACT code list exists for this data element codes should be from the EANCOM code list or be allocated depending on the requirements of the user. Should it not be possible to provide a user code in this data element and a free form characteristic description is used in data element 7036, then it is recommended that the code value 'ZZZ' be put in data element 7037 (which is mandatory). ZZZ = Mutually defined (GS1 Permanent Code)
1131	Code list identification code	C an..17	**O**		
3055	Code list responsible agency code	C an..3	**D**		9 = GS1 60 = Assigned by national trade agency 91 = Assigned by supplier or supplier's agent 92 = Assigned by buyer or buyer's agent
7036	Characteristic description	C an..35	**O**		This data element is used to provide free form text characteristics for use where no coded values exist in data element 7037.
7036	Characteristic description	C an..35	**O**		
4051	Characteristic relevance code	C an..3	**N**		

Segment Notes:

This segment is used to specify any characteristics which apply to all the products in the message.

Example:
CCI+11++X1::9'

5. Segments Layout

Segment number: 17

SG7	- C	999	-	CCI-CAV-MEA
CAV	- C	10	-	Characteristic value

Function:

To provide the value of a characteristic.

		EDIFACT	GS1	*	Description
C889	CHARACTERISTIC VALUE	M	**M**		
7111	Characteristic value description code	C an..3	**A**		This data element is used to provide characteristic values. As no EDIFACT code list exists for this data element codes should be allocated depending on the requirements of the user.
1131	Code list identification code	C an..17	**O**		
3055	Code list responsible agency code	C an..3	**D**		9 = GS1 91 = Assigned by supplier or supplier's agent 92 = Assigned by buyer or buyer's agent
7110	Characteristic value description	C an..35	**O**		
7110	Characteristic value description	C an..35	**O**		

Segment Notes:

This segment is used to further specify product characteristics which apply to all the products in the message.

Example:
This example indicates that the ingredient E15 is present in the product. The code E15 has been allocated by a national agency.
CAV+E15::60'

5. Segments Layout

Segment number: 18

SG7	- C	999	-	CCI-CAV-MEA
MEA	- C	10	-	Measurements

Function:

To specify physical measurements, including dimension tolerances, weights and counts.

		EDIFACT	GS1	*	Description
6311	Measurement purpose code qualifier	M an..3	**M**		PD = Physical dimensions (product ordered) SV = Specification value
C502	MEASUREMENT DETAILS	C	**O**		
6313	Measured attribute code	C an..3	**A**		AAA = Unit net weight DI = Diameter DP = Depth HT = Height dimension LN = Length dimension TH = Thickness
6321	Measurement significance code	C an..3	**O**		3 = Approximately 4 = Equal to
6155	Non-discrete measurement name code	C an..17	**O**		
6154	Non-discrete measurement name	C an..70	**N**		
C174	VALUE/RANGE	C	**R**		
6411	Measurement unit code	M an..3	**M**		
6314	Measurement value	C an..18	**O**		
6162	Range minimum value	C n..18	**O**		
6152	Range maximum value	C n..18	**O**		
6432	Significant digits quantity	C n..2	**N**		
7383	Surface or layer code	C an..3	**N**		

Segment Notes:

This segment is used to specify any measurements related to the currently identified product characteristic class.

Example:
MEA+SV++P1:15'
When used in conjunction with example 3 in the CCI and CAV segments, this MEA segment indicates the measurements for the specification identified in the CCI and CAV segments. In this instance the ingredient E15 is 15% of the total ingredients for the product.

5. Segments Layout

Segment number: 19

SG9	- C	999999 -	LIN-PIA-DTM-MEA-HAN-DOC-FTX-PGI-SG10-SG11-SG13-SG15-SG16-SG17-SG18-SG20-SG21-SG23
LIN	- M	1 -	Line item

Function:

To identify a line item and configuration.

		EDIFACT	GS1	*	Description
1082	Line item identifier	C an..6	**R**		Application generated number of the item lines within the product data message.
1229	Action request/notification description code	C an..3	**O**	*	1 = Added 2 = Deleted 3 = Changed 4 = No action 10 = Not found 1 = Addition - This code is used for adding new products or for providing information about existing products for the first time to a new trading partner. 2 = Deletion - This code is used to delete a product from the partner's item file. In the case of deletion, only the LIN segment needs to be sent. 3 = Change - This code is used to modify or add any information relevant to a product already known by the trading partner. Only the segments containing modified information need to be sent. All previously sent data in a modified segment must be provided. All occurrences (repetitions) of a modified segment must be provided (whether modified or not). 4 = No Action - This code is used when the product information has already been sent to the trading partner. It is sent again for confirmation. 10 = Not found - This code is used when the message responds to a previous PRODAT message. It is used to indicate that the GTIN included in the PRODAT could not be found on the product data base of the party receiving the PRODAT message.
C212	ITEM NUMBER IDENTIFICATION	C	**D**		This composite is only used for the identification of GS1/UPC codes. If another coding structure is required, e.g. HIBC, this composite will not be used and the code will be detailed in the PIA segment.
7140	Item identifier	C an..35	**R**		Format n..14 GTIN
7143	Item type identification code	C an..3	**R**	*	SRV = GS1 Global Trade Item Number
1131	Code list identification code	C an..17	**N**		
3055	Code list responsible agency code	C an..3	**N**		
C829	SUB-LINE INFORMATION	C	**N**		
5495	Sub-line indicator code	C an..3			
1082	Line item identifier	C an..6			
1222	Configuration level number	C n..2	**N**		
7083	Configuration operation code	C an..3	**N**		

Segment Notes:

This segment is used to identify the line item for which product data is being provided.

5. Segments Layout

Segment number: 19

If Global Trade Item Numbers are available it is mandatory to use GTIN within the LIN segment.

Note on DE 1082:
Numbering rule: In Part I, section 4.10 there is the recommendation “Within EANCOM® it is recommended that the line numbers used in the first occurrence of data element 1082 in the LIN segment be sequential, starting at 1 for each new message.”

Note on DE 7140:
Only the following significant digits are possible:
- 8 digits for GTIN 8 codes
- 12 digits for GTIN 12 codes
- 13 digits for GTIN 13 codes
- 14 digits for GTIN 14 codes

Example:
LIN+1++5412345123453:SRV'

5. Segments Layout

Segment number: 20

SG9	- C	999999	-	LIN-PIA-DTM-MEA-HAN-DOC-FTX-PGI-SG10-SG11-SG13-SG15-SG16-SG17-SG18-SG20-SG21-SG23
PIA	- C	10	-	Additional product id

Function:

To specify additional or substitutional item identification codes.

		EDIFACT	GS1	*	Description
4347	Product identifier code qualifier	M an..3	**M**	*	1 = Additional identification 2 = Identification for potential substitution 3 = Substituted by 4 = Substituted for 5 = Product identification X1 = No substitution accepted (GS1 Temporary Code) Product Id function, coded has the following restricted coded functions: 1 - Additional identification - To provide an additional identity for the primary GTIN identified in the LIN segment. The additional code can consist of: A supplemental identification which provides more information complementary to the main GTIN provided in the LIN segment, e.g., a batch number, promotional variant number, etc, or an alternative identification which may be used instead of the main GTIN provided in the LIN segment, e.g., a buyer's article number, an HIBC code, etc,. 2 - Identification for potential substitution - To provide the GTIN of a product which can substitute the product identified by the GTIN provided in the LIN segment when the latter is temporarily unavailable, e.g., a similar or identical product coded with a different GTIN (article coded in a different country), a different size unit of the same product, a similar product with for example a different brand name. 3 - Substituted by - To provide the GTIN of a product which has substituted the product identified in the LIN segment. In the Product Data message this function code may be used to inform trading partners of a number change relevant to a product. In this case, the LIN segment will contain the old trade item number and the 'Substituted By' PIA segment, the new trade item number. 4 - Substituted for - To provide the GTIN of a product which has been substituted for the product identified by the GTIN in the LIN segment. In the Product Data message this function code may be used to inform trading partners of a number change relevant to a product. In this case, the LIN segment will contain the new GTIN and the 'Substituted For' PIA segment will identify the old GTIN which has been substituted. 5 - Product Identification - To provide the primary product identification code when no GTIN has been provided in the LIN segment. X1 - No substitution accepted - The buyer will not accept any other product code than the one specified in the LIN segment. The code specified in the LIN

5. Segments Layout

Segment number: 20

		EDIFACT	GS1	*	Description
					segment is repeated in the PIA segment to confirm the only code acceptable.
C212	ITEM NUMBER IDENTIFICATION	M	**M**		
7140	Item identifier	C an..35	**R**		
7143	Item type identification code	C an..3	**R**		AC = HIBC (Health Industry Bar Code) IB = ISBN (International Standard Book Number) IN = Buyer's item number PV = Promotional variant number SA = Supplier's article number SRV = GS1 Global Trade Item Number
1131	Code list identification code	C an..17	**O**		
3055	Code list responsible agency code	C an..3	**D**		9 = GS1 91 = Assigned by supplier or supplier's agent 92 = Assigned by buyer or buyer's agent
C212	ITEM NUMBER IDENTIFICATION	C	**O**		
7140	Item identifier	C an..35	**R**		
7143	Item type identification code	C an..3	**R**		
1131	Code list identification code	C an..17	**O**		
3055	Code list responsible agency code	C an..3	**D**		
C212	ITEM NUMBER IDENTIFICATION	C	**O**		
7140	Item identifier	C an..35	**R**		
7143	Item type identification code	C an..3	**R**		
1131	Code list identification code	C an..17	**O**		
3055	Code list responsible agency code	C an..3	**D**		
C212	ITEM NUMBER IDENTIFICATION	C	**O**		
7140	Item identifier	C an..35	**R**		
7143	Item type identification code	C an..3	**R**		
1131	Code list identification code	C an..17	**O**		
3055	Code list responsible agency code	C an..3	**D**		
C212	ITEM NUMBER IDENTIFICATION	C	**O**		
7140	Item identifier	C an..35	**R**		
7143	Item type identification code	C an..3	**R**		
1131	Code list identification code	C an..17	**O**		
3055	Code list responsible agency code	C an..3	**D**		

Segment Notes:

5. Segments Layout

Segment number: 20

This segment is used to identify additional product codes for the current line item.

Examples:
PIA+1+ABF5682:IN'
In this example the PIA segment is used to provide an additional identification to the GTIN provided in the LIN segment. The GTIN 5412345123453 provided in the LIN segment refers to the internal buyer's item number ABF5682.

PIA+2+5412345111184:SRV'
In this example the 'Identification for potential substitution' PIA segment is used to provide a number identification for substitution. The product identified with the GTIN 5412345123453 in the LIN segment can be substituted by the product identified in the current PIA segment by the GTIN 5412345111184 in case the former is not available.

PIA+3+5412345111184:SRV'
In this example the 'Substituted By' PIA segment is used to identify a number which is replacing the current primary GTIN. The current number is identified in the 'Product Identification' PIA segment.

PIA+4+5410738251028:SRV'
In this example the 'Substituted For' PIA segment is used to provide the number of the product which is being substituted for the former primary GTIN. The new code 5412345111184 would be included in the message in the 'Product Identification' LIN segment.

PIA+5+2209953C001L:AC'
This example details the HIBC code 2209953C001L which is provided as the primary product code because no GTIN was provided in the LIN segment.

PIA+X1+5412345111115:SRV'
This example details the situation where the buyer explicitly specifies that no other product is acceptable but the one specified in the LIN segment. The PIA re-specifies the product code from the LIN segment.

5. Segments Layout

Segment number: 21

SG9	- C	999999 -	LIN-PIA-DTM-MEA-HAN-DOC-FTX-PGI-SG10-SG11-SG13-SG15-SG16-SG17-SG18-SG20-SG21-SG23
DTM	- C	99 -	Date/time/period

Function:

To specify date, and/or time, or period.

		EDIFACT	GS1	*	Description
C507	DATE/TIME/PERIOD	M	**M**		
2005	Date or time or period function code qualifier	M an..3	**M**		44 = Availability 157 = Validity start date 169 = Lead time 273 = Validity period 799 = Validity end date
2380	Date or time or period value	C an..35	**R**		
2379	Date or time or period format code	C an..3	**R**		102 = CCYYMMDD 718 = CCYYMMDD-CCYYMMDD 802 = Month 803 = Week 804 = Day

Segment Notes:

This segment is used to specify dates related to the current line item.

Example:
DTM+44:20020701:102'
The product will be available on the 1st of July 2002.

DTM+169:3:803'
The lead time on the product is 3 weeks.

5. Segments Layout

Segment number: 22

SG9	- C	999999 -	LIN-PIA-DTM-MEA-HAN-DOC-FTX-PGI-SG10-SG11-SG13-SG15-SG16-SG17-SG18-SG20-SG21-SG23
MEA	- C	10 -	Measurements

Function:

To specify physical measurements, including dimension tolerances, weights and counts.

		EDIFACT	GS1	*	Description
6311	Measurement purpose code qualifier	M an..3	**M**		PD = Physical dimensions (product ordered)
C502	MEASUREMENT DETAILS	C	**A**		
6313	Measured attribute code	C an..3	**A**		AAA = Unit net weight DI = Diameter DP = Depth HT = Height dimension LN = Length dimension TH = Thickness
6321	Measurement significance code	C an..3	**O**		3 = Approximately 4 = Equal to
6155	Non-discrete measurement name code	C an..17	**O**		
6154	Non-discrete measurement name	C an..70	**N**		
C174	VALUE/RANGE	C	**R**		
6411	Measurement unit code	M an..3	**M**		
6314	Measurement value	C an..18	**O**		
6162	Range minimum value	C n..18	**O**		
6152	Range maximum value	C n..18	**O**		
6432	Significant digits quantity	C n..2	**N**		
7383	Surface or layer code	C an..3	**N**		

Segment Notes:

This segment is used to specify the physical dimensions of the current line item.

Example:
MEA+PD+LN:4+MTR:8'
The precise length of the product identified by the GTIN 5412345123453 is 8 metres.

5. Segments Layout

Segment number: 23

SG9	- C	999999 -	LIN-PIA-DTM-MEA-HAN-DOC-FTX-PGI-SG10-SG11-SG13-SG15-SG16-SG17-SG18-SG20-SG21-SG23
HAN	- C	5 -	Handling instructions

Function:

To specify handling and where necessary, notify hazards.

		EDIFACT	GS1	*	Description
C524	HANDLING INSTRUCTIONS	C	**A**		
4079	Handling instruction description code	C an..3	**R**		BIG = Outsized (GS1 Temporary Code) CRU = Crushable (GS1 Temporary Code) EAT = Foodstuffs (GS1 Temporary Code) HWC = Handle with care (GS1 Temporary Code) PSC = Pest controlling (GS1 Temporary Code) STR = Stacking restricted (GS1 Temporary Code) UST = Unstackable (GS1 Temporary Code)
1131	Code list identification code	C an..17	**A**		
3055	Code list responsible agency code	C an..3	**D**	*	9 = GS1 This data element is only used when GS1 codes are used in data element 4079.
4078	Handling instruction description	C an..70	**O**		
C218	HAZARDOUS MATERIAL	C	**O**		
7419	Hazardous material category name code	C an..7	**D**		The preferred way to provide 'ADR international classification' or 'Hazardous material standard text' is to use DE 1131. Used to provide the material class code of an organization.
1131	Code list identification code	C an..17	**O**		ADR = Accord Europeen au transport international dangereuses (GS1 Temporary Code) HMT = Hazardous material standard text (GS1 Temporary Code)
3055	Code list responsible agency code	C an..3	**D**	*	9 = GS1 This data element is only used when GS1 codes are used in data element 7419.
7418	Hazardous material category name	C an..35	**O**		To be used when no code value is available for DE7419.

Segment Notes:

This segment is used to provide any handling instructions which are relevant to the current line item.

Example:
HAN+EAT::9'

5. Segments Layout

Segment number: 24

SG9	- C	999999 -	LIN-PIA-DTM-MEA-HAN-DOC-FTX-PGI-SG10-SG11-SG13-SG15-SG16-SG17-SG18-SG20-SG21-SG23
DOC	- C	99 -	Document/message details

Function:

To identify documents and details directly related to it.

		EDIFACT	GS1	*	Description
C002	DOCUMENT/MESSAGE NAME	M	**M**		
1001	Document name code	C an..3	**R**		1 = Certificate of analysis 2 = Certificate of conformity 3 = Certificate of quality 861 = Certificate of origin YB4 = Media campaign document (GS1 Temporary Code) YB5 = Product Marketing document, detailed (GS1 Temporary Code) YB6 = Product Marketing document, concise (GS1 Temporary Code)
1131	Code list identification code	C an..17	**O**		
3055	Code list responsible agency code	C an..3	**D**		
1000	Document name	C an..35	**N**		
C503	DOCUMENT/MESSAGE DETAILS	C	**O**		
1004	Document identifier	C an..35	**R**		
1373	Document status code	C an..3	**N**		
1366	Document source description	C an..70	**N**		
3453	Language name code	C an..3	**N**		
1056	Version identifier	C an..9	**N**		
1060	Revision identifier	C an..6	**N**		
3153	Communication medium type code	C an..3	**N**		
1220	Document copies required quantity	C n..2	**N**		
1218	Document originals required quantity	C n..2	**N**		

Segment Notes:

This segment is used to identify any documentation related to the current line item, e.g. certificate of origin.

Example:
DOC+861+NL52441'
This example indicates that a certificate of origin with the number NL52441 exists for the current line item.

5. Segments Layout

Segment number: 25

SG9	- C	999999 -	LIN-PIA-DTM-MEA-HAN-DOC-FTX-PGI-SG10-SG11-SG13-SG15-SG16-SG17-SG18-SG20-SG21-SG23
FTX	- C	99 -	Free text

Function:

To provide free form or coded text information.

		EDIFACT	GS1	*	Description
4451	Text subject code qualifier	M an..3	**M**		AAI = General information AFF = Batch code structure ITS = Testing instructions PRD = Product information SIN = Special instructions SUR = Supplier remarks
4453	Free text function code	C an..3	**O**	*	1 = Text for subsequent use
C107	TEXT REFERENCE	C	**D**		This composite is only used when trading partners have agreed to use mutually defined code values.
4441	Free text value code	M an..17	**M**		
1131	Code list identification code	C an..17	**O**		
3055	Code list responsible agency code	C an..3	**D**		91 = Assigned by supplier or supplier's agent 92 = Assigned by buyer or buyer's agent
C108	TEXT LITERAL	C	**D**		This composite is only used if coded text can not be used.
4440	Free text value	M an..512	**M**		
4440	Free text value	C an..512	**O**		
4440	Free text value	C an..512	**O**		
4440	Free text value	C an..512	**O**		
4440	Free text value	C an..512	**O**		
3453	Language name code	C an..3	**D**		ISO 639 two alpha code This data element is only used when non coded free text has been provided in data element C108.
4447	Free text format code	C an..3	**N**		

Segment Notes:

This segment is used to provide free form or coded text information related to the current line item.
Use of this segment in free form is not recommended since it may inhibit automatic processing of the product data message. Coded references to standard texts is an available functionality which enables automatic processing and reduces transmission and processing overheads. Standard texts should be mutually defined between trading partners and can be used to cover legal or other requirements.

Example:
FTX+AAI+++TOP SELLING PRODUCT IN ITS FIELD IN NINE COUNTRIES'

5. Segments Layout

Segment number: 26

SG9	- C	999999	-	LIN-PIA-DTM-MEA-HAN-DOC-FTX-PGI-SG10-SG11-SG13-SG15-SG16-SG17-SG18-SG20-SG21-SG23
PGI	- C	10	-	Product group information

Function:

To indicate the group in which a product belongs.

		EDIFACT	GS1	*	Description
5379	Product group type code	M an..3	**M**	*	3 = Catalogue 4 = Group of products with same price 11 = Product group
C288	PRODUCT GROUP	C	**O**		
5389	Product group name code	C an..25	**O**		
1131	Code list identification code	C an..17	**O**		
3055	Code list responsible agency code	C an..3	**D**		
5388	Product group name	C an..35	**O**		

Segment Notes:

This segment is used to provide product or price grouping information relevant to the current line item only.

Example:
PGI+4'

5. Segments Layout

Segment number: 27

SG9	- C	999999	-	LIN-PIA-DTM-MEA-HAN-DOC-FTX-PGI-SG10-SG11-SG13-SG15-SG16-SG17-SG18-SG20-SG21-SG23
SG10	- C	10	-	IMD-FTX
IMD	- M	1	-	Item description

Function:

To describe an item in either an industry or free format.

		EDIFACT	GS1	*	Description
7077	Description format code	C an..3	**R**		A = Free-form long description B = Code and text C = Code (from industry code list) D = Free-form price look up E = Free-form short description F = Free-form S = Structured (from industry code list) This DE qualifies the type of description as: free-form, free form long, free form short or free form PLU. The actual text descriptions are provided in one or more occurrences of DE 7008. If more than one description type is needed, the IMD segment is repeated.
C272	ITEM CHARACTERISTIC	C	**O**		
7081	Item characteristic code	C an..3	**R**		4 = Finish 35 = Colour 98 = Size 219 = Style HAN = Handling instructions (GS1 Temporary Code) HAZ = Hazardous material codes (GS1 Temporary Code) KEY = Keyword (GS1 Temporary Code) If colour descriptions are provided the actual code is in DE 7009 followed by the relevant code list responsible agency.
1131	Code list identification code	C an..17	**O**		
3055	Code list responsible agency code	C an..3	**D**	*	9 = GS1 Must be used if DE7081 contains an GS1 Code.
C273	ITEM DESCRIPTION	C	**A**		
7009	Item description code	C an..17	**O**		CU = Consumer unit (GS1 Permanent Code) DIC = Discount coupon (GS1 Permanent Code) DU = Despatch unit (GS1 Permanent Code) HN = Handling unit (GS1 Permanent Code) IN = Invoicing unit (GS1 Permanent Code) IT = Intermediate unit (GS1 Permanent Code) NO = Not an ordering unit (GS1 Permanent Code) TU = Traded unit (GS1 Permanent Code) SG = Standard group of products (mixed assortment) (GS1 Permanent Code) SU = Smallest unit (GS1 Permanent Code) VQ = Variable quantity product (GS1 Permanent Code)
1131	Code list identification code	C an..17	**O**		

5. Segments Layout

Segment number: 27

		EDIFACT	GS1	*	Description
3055	Code list responsible agency code	C an..3	**D**		9 = GS1 91 = Assigned by supplier or supplier's agent 92 = Assigned by buyer or buyer's agent
7008	Item description	C an..256	**O**		
7008	Item description	C an..256	**O**		
3453	Language name code	C an..3	**O**		
7383	Surface or layer code	C an..3	**N**		

Segment Notes:

This segment is used to provide the product description for the current line item.
Product description information is required in the Product Data message when a product is new or its description has been amended, otherwise its use is not recommended.
If you wish to indicate that promotional details are marked on the package, then this should be indicated in DE 7233 in the PAC segment.

Example:
This example details a free form description of a product as being a book case.
IMD+C++CU::9'
This example details the fact that the current line item is a consumer unit.

IMD+F++:::BOOK CASE'
This example details a free form description of a product as being a book case.

5. Segments Layout

Segment number: 28

SG9	- C	999999 -	LIN-PIA-DTM-MEA-HAN-DOC-FTX-PGI-SG10-SG11-SG13-SG15-SG16-SG17-SG18-SG20-SG21-SG23
SG10	- C	10 -	IMD-FTX
FTX	- C	99 -	Free text

Function:

To provide free form or coded text information.

		EDIFACT	GS1	*	Description
4451	Text subject code qualifier	M an..3	**M**		AFG = Product application PRD = Product information
4453	Free text function code	C an..3	**O**	*	1 = Text for subsequent use
C107	TEXT REFERENCE	C	**D**		This composite is only used when trading partners have agreed to use mutually defined code values.
4441	Free text value code	M an..17	**M**		
1131	Code list identification code	C an..17	**O**		
3055	Code list responsible agency code	C an..3	**D**		91 = Assigned by supplier or supplier's agent 92 = Assigned by buyer or buyer's agent
C108	TEXT LITERAL	C	**D**		This composite is only used if coded text can not be used.
4440	Free text value	M an..512	**M**		
4440	Free text value	C an..512	**O**		
4440	Free text value	C an..512	**O**		
4440	Free text value	C an..512	**O**		
4440	Free text value	C an..512	**O**		
3453	Language name code	C an..3	**D**		ISO 639 two alpha code This data element is only used when non coded free text has been provided in data element C108.
4447	Free text format code	C an..3	**N**		

Segment Notes:

This segment is used to provide free form or coded text information.
Use of this segment in free form is not recommended since it may inhibit automatic processing of the product data message. Coded references to standard texts is an available functionality which enables automatic processing and reduces transmission and processing overheads. Standard texts should be mutually defined between trading partners and can be used to cover legal or other requirements.

Example:
FTX+AFG+1+002::92'

5. Segments Layout

Segment number: 29

SG9	- C	999999	-	LIN-PIA-DTM-MEA-HAN-DOC-FTX-PGI-SG10-SG11-SG13-SG15-SG16-SG17-SG18-SG20-SG21-SG23
SG11	- C	10	-	TRU-DTM
TRU	- M	1	-	Technical rules

Function:

A segment specifying technical rules.

		EDIFACT	GS1	*	Description
7402	Object identifier	M an..35	**M**		
1056	Version identifier	C an..9	**O**		
1058	Release identifier	C an..9	**O**		
7175	Rule part identifier	C an..7	**O**		
3055	Code list responsible agency code	C an..3	**O**		5 = ISO (International Organization for Standardization) 403 = Comite Europeen de Normalisation

Segment Notes:

This segment is used to specify any technical rules which relate to the current line item only.

Example:
TRU+9001+2+1+6+5'
Part 6 of the technical rule 9001, version 2, release 1, issued by ISO.

5. Segments Layout

Segment number: 30

SG9	- C	999999	-	LIN-PIA-DTM-MEA-HAN-DOC-FTX-PGI-SG10-SG11-SG13-SG15-SG16-SG17-SG18-SG20-SG21-SG23
SG11	- C	10	-	TRU-DTM
DTM	- C	1	-	Date/time/period

Function:

To specify date, and/or time, or period.

		EDIFACT	GS1	*	Description
C507	DATE/TIME/PERIOD	M	**M**		
2005	Date or time or period function code qualifier	M an..3	**M**		261 = Release date/time
2380	Date or time or period value	C an..35	**R**		
2379	Date or time or period format code	C an..3	**R**		102 = CCYYMMDD 203 = CCYYMMDDHHMM 718 = CCYYMMDD-CCYYMMDD

Segment Notes:

This segment is used to specify the release date of the technical rules given in the previous TRU segment.

Example:
DTM+261:20020120:102'

5. Segments Layout

Segment number: 31

SG9	- C	999999	-	LIN-PIA-DTM-MEA-HAN-DOC-FTX-PGI-SG10-SG11-SG13-SG15-SG16-SG17-SG18-SG20-SG21-SG23
SG13	- C	10	-	QTY
QTY	- M	1	-	Quantity

Function:

To specify a pertinent quantity.

		EDIFACT	GS1	*	Description
C186	QUANTITY DETAILS	M	**M**		
6063	Quantity type code qualifier	M an..3	**M**		59 = Number of consumer units in the traded unit 17E = Number of units in lower packaging or configuration level (GS1 Temporary Code) 45E = Number of units in higher packaging or configuration level (GS1 Temporary Code)
6060	Quantity	M an..35	**M**		
6411	Measurement unit code	C an..3	**O**		

Segment Notes:

This segment is used to specify the quantities related to the current line item, e.g. the number of consumer units in the traded unit.

Example:
QTY+59:40'

5. Segments Layout

Segment number: 32

SG9	- C	999999 -	LIN-PIA-DTM-MEA-HAN-DOC-FTX-PGI-SG10-SG11-SG13-SG15-SG16-SG17-SG18-SG20-SG21-SG23
SG15	- C	99999 -	CCI-CAV-MEA
CCI	- M	1 -	Characteristic/class id

Function:

To identify and describe a specific characteristic and its relevance for subsequent business processes.

		EDIFACT	GS1	*	Description
7059	Class type code	C an..3	**O**		11 = Product
C502	MEASUREMENT DETAILS	C	**N**		
6313	Measured attribute code	C an..3	**O**		
6321	Measurement significance code	C an..3			
6155	Non-discrete measurement name code	C an..17			
6154	Non-discrete measurement name	C an..70			
C240	PRODUCT CHARACTERISTIC	C	**O**		
7037	Characteristic description code	M an..17	**M**		This data element is used to identify the characteristics of a line item in user coded form. As no EDIFACT code list exists for this data element codes should be from the EANCOM code list or be allocated depending on the requirements of the user. Should it not be possible to provide a user code in this data element and a free form characteristic description is used in data element 7036, then it is recommended that the code value 'ZZZ' be put in data element 7037 (which is mandatory). ZZZ = Mutually defined (GS1 Permanent Code)
1131	Code list identification code	C an..17	**O**		
3055	Code list responsible agency code	C an..3	**D**		9 = GS1 60 = Assigned by national trade agency 91 = Assigned by supplier or supplier's agent 92 = Assigned by buyer or buyer's agent
7036	Characteristic description	C an..35	**O**		This data element is used to provide free form text characteristics for use where no coded values exist in data element 7037.
7036	Characteristic description	C an..35	**O**		
4051	Characteristic relevance code	C an..3	**N**		

Segment Notes:

This segment is used to specify the characteristics of the current line item.

Example:
CCI+11++ZZZ::91:FABRIC'
This example indicates for the textile industry that the product characteristic being identified is for fabric. As no code value is available (code ZZZ is a dummy because DE 7037 is mandatory) the information is provided in free text form.

5. Segments Layout

Segment number: 33

SG9	- C	999999 -	LIN-PIA-DTM-MEA-HAN-DOC-FTX-PGI-SG10-SG11-SG13-SG15-SG16-SG17-SG18-SG20-SG21-SG23
SG15	- C	99999 -	CCI-CAV-MEA
CAV	- C	10 -	Characteristic value

Function:

To provide the value of a characteristic.

		EDIFACT	GS1	*	Description
C889	CHARACTERISTIC VALUE	M	**M**		
7111	Characteristic value description code	C an..3	**A**		This data element is used to provide characteristic values. As no EDIFACT code list exists for this data element codes should be allocated depending on the requirements of the user.
1131	Code list identification code	C an..17	**O**		
3055	Code list responsible agency code	C an..3	**D**		9 = GS1 60 = Assigned by national trade agency 91 = Assigned by supplier or supplier's agent 92 = Assigned by buyer or buyer's agent
7110	Characteristic value description	C an..35	**O**		
7110	Characteristic value description	C an..35	**O**		

Segment Notes:

This segment is used to further specify product characteristics for the current line item.

Example:
CAV+:::WOOL'
When using in combination with the example in the previous CCI indicates that the fabric used in the product is wool. As no code value exist within the industry the free text description is used.

5. Segments Layout

Segment number: 34

SG9	- C	999999 -	LIN-PIA-DTM-MEA-HAN-DOC-FTX-PGI-SG10-SG11-SG13-SG15-SG16-SG17-SG18-SG20-SG21-SG23
SG15	- C	99999 -	CCI-CAV-MEA
MEA	- C	10 -	Measurements

Function:

To specify physical measurements, including dimension tolerances, weights and counts.

		EDIFACT	GS1	*	Description
6311	Measurement purpose code qualifier	M an..3	**M**		PD = Physical dimensions (product ordered) SV = Specification value
C502	MEASUREMENT DETAILS	C	**O**		
6313	Measured attribute code	C an..3	**A**		AAA = Unit net weight DI = Diameter DP = Depth HT = Height dimension LN = Length dimension TH = Thickness
6321	Measurement significance code	C an..3	**O**		3 = Approximately 4 = Equal to
6155	Non-discrete measurement name code	C an..17	**O**		
6154	Non-discrete measurement name	C an..70	**N**		
C174	VALUE/RANGE	C	**R**		
6411	Measurement unit code	M an..3	**M**		
6314	Measurement value	C an..18	**O**		
6162	Range minimum value	C n..18	**O**		
6152	Range maximum value	C n..18	**O**		
6432	Significant digits quantity	C n..2	**N**		
7383	Surface or layer code	C an..3	**N**		

Segment Notes:

This segment is used to specify any measurements related to the currently identified product characteristic class.

Example:
MEA+SV++P1:15'

5. Segments Layout

Segment number: 35

SG9	- C	999999	-	LIN-PIA-DTM-MEA-HAN-DOC-FTX-PGI-SG10-SG11-SG13-SG15-SG16-SG17-SG18-SG20-SG21-SG23
SG16	- C	999	-	ALI
ALI	- M	1	-	Additional information

Function:

To indicate that special conditions due to the origin, customs preference, fiscal or commercial factors are applicable.

		EDIFACT	GS1	*	Description
3239	Country of origin name code	C an..3	**O**		Use ISO 3166 two alpha country code.
9213	Duty regime type code	C an..3	**N**		
4183	Special condition code	C an..3	**O**		96 = Promotional advertising 98 = Promotional shelf display 99 = Safety data sheet required to accompany goods when moved
4183	Special condition code	C an..3	**O**		
4183	Special condition code	C an..3	**O**		
4183	Special condition code	C an..3	**O**		
4183	Special condition code	C an..3	**O**		

Segment Notes:

This segment is used to specify any special conditions applicable for the current line item.

Example:
ALI+++96'

5. Segments Layout

Segment number: 36

SG9	- C	999999	-	LIN-PIA-DTM-MEA-HAN-DOC-FTX-PGI-SG10-SG11-SG13-SG15-SG16-SG17-SG18-SG20-SG21-SG23
SG17	- C	99	-	RFF-DTM
RFF	- M	1	-	Reference

Function:

To specify a reference.

		EDIFACT	GS1	*	Description
C506	REFERENCE	M	**M**		
1153	Reference code qualifier	M an..3	**M**		ASV = Product data file number AVB = Product characteristics directory AXF = Product inquiry number CR = Customer reference number CT = Contract number PL = Price list number
1154	Reference identifier	C an..70	**R**		
1156	Document line identifier	C an..6	**O**		
4000	Reference version identifier	C an..35	**O**		
1060	Revision identifier	C an..6	**N**		

Segment Notes:

This segment is used to specify any references related to the current line item. References stated here override references specified at header level for the current line only when the same qualifier is used.

Example:
RFF+CT:CT1241'

5. Segments Layout

Segment number: 37

SG9	- C	999999 -	LIN-PIA-DTM-MEA-HAN-DOC-FTX-PGI-SG10-SG11-SG13-SG15-SG16-SG17-SG18-SG20-SG21-SG23
SG17	- C	99 -	RFF-DTM
DTM	- C	5 -	Date/time/period

Function:

To specify date, and/or time, or period.

		EDIFACT	GS1	*	Description
C507	DATE/TIME/PERIOD	M	**M**		
2005	Date or time or period function code qualifier	M an..3	**M**	*	171 = Reference date/time 434 = Maturity date
2380	Date or time or period value	C an..35	**R**		
2379	Date or time or period format code	C an..3	**R**		102 = CCYYMMDD

Segment Notes:

This segment is used to specify dates related to the references provided in the previous RFF segment.

Example:
DTM+171:20021001:102'

5. Segments Layout

Segment number: 38

SG9	- C	999999 -	LIN-PIA-DTM-MEA-HAN-DOC-FTX-PGI-SG10-SG11-SG13-SG15-SG16-SG17-SG18-SG20-SG21-SG23
SG18	- C	99 -	NAD
NAD	- M	1 -	Name and address

Function:

To specify the name/address and their related function, either by C082 only and/or unstructured by C058 or structured by C080 thru 3207.

		EDIFACT	GS1	*	Description
3035	Party function code qualifier	M an..3	**M**		DS = Distributor MF = Manufacturer of goods SR = Supplier's agent/representative SU = Supplier
C082	PARTY IDENTIFICATION DETAILS	C	**A**		
3039	Party identifier	M an..35	**M**		For identification of parties it is recommended to use GLN - Format n13.
1131	Code list identification code	C an..17	**O**		
3055	Code list responsible agency code	C an..3	**R**	*	9 = GS1
C058	NAME AND ADDRESS	C	**O**		This composite may only be used to fulfill the requirements of directive 2003/58/EC, article 4.
3124	Name and address description	M an..35	**M**		
3124	Name and address description	C an..35	**O**		
3124	Name and address description	C an..35	**O**		
3124	Name and address description	C an..35	**O**		
3124	Name and address description	C an..35	**O**		
C080	PARTY NAME	C	**D**		
3036	Party name	M an..35	**M**		Party Name in clear text.
3036	Party name	C an..35	**O**		
3036	Party name	C an..35	**O**		
3036	Party name	C an..35	**O**		
3036	Party name	C an..35	**O**		
3045	Party name format code	C an..3	**O**		
C059	STREET	C	**D**		
3042	Street and number or post office box identifier	M an..35	**M**		Building Name/Number and Street name
3042	Street and number or post office box identifier	C an..35	**O**		Name and/or P.O. Box
3042	Street and number or post office box identifier	C an..35	**O**		
3042	Street and number or post office box identifier	C an..35	**O**		
3164	City name	C an..35	**D**		City/Town, clear text.
C819	COUNTRY SUB-ENTITY DETAILS	C	**D**		

5. Segments Layout

Segment number: 38

		EDIFACT	GS1	*	Description
3229	Country sub-entity name code	C an..9	**O**		
1131	Code list identification code	C an..17	**O**		
3055	Code list responsible agency code	C an..3	**O**		
3228	Country sub-entity name	C an..70	**O**		County/State, clear text.
3251	Postal identification code	C an..17	**D**		Postal Code
3207	Country name code	C an..3	**D**		ISO 3166 two alpha code

Segment Notes:

This segment is used to identify additional parties related to the current line item only, e.g. manufacturer, distributor.

Example:
NAD+MF+5411111123451::9'

Dependency Notes:
The following composites and data elements are only used when a coded name and address can not be used.
The affected composites and data elements are as follows:
C080 - C059 - 3164 - C819 - 3251 - 3207

5. Segments Layout

Segment number: 39

SG9	- C	999999 -	LIN-PIA-DTM-MEA-HAN-DOC-FTX-PGI-SG10-SG11-SG13-SG15-SG16-SG17-SG18-SG20-SG21-SG23
SG20	- C	10 -	DGS-QTY-FTX
DGS	- M	1 -	Dangerous goods

Function:

To identify dangerous goods.

		EDIFACT	GS1	*	Description
8273	Dangerous goods regulations code	C an..3	**O**		ADR = European agreement regarding the total carriage of dangerous goods CFR = 49 code of federal regulations RID = Rail/road dangerous goods book (RID)
C205	HAZARD CODE	C	**O**		
8351	Hazard identification code	M an..7	**M**		Classification according ADR/RID rules
8078	Additional hazard classification identifier	C an..7	**O**		Additional according ADR/RID rules
8092	Hazard code version identifier	C an..10	**O**		
C234	UNDG INFORMATION	C	**O**		
7124	United Nations Dangerous Goods (UNDG) identifier	C n4	**O**		
7088	Dangerous goods flashpoint value	C an..8	**O**		Declaration of the flashpoint.
C223	DANGEROUS GOODS SHIPMENT FLASHPOINT	C	**O**		
7106	Shipment flashpoint value	C n3	**O**		
6411	Measurement unit code	C an..3	**O**		
8339	Packaging danger level code	C an..3	**O**		1 = Great danger 2 = Medium danger 3 = Minor danger
8364	Emergency procedure for ships identifier	C an..6	**O**		Only for emergency procedure on ships.
8410	Hazard medical first aid guide identifier	C an..4	**O**		
8126	Transport emergency card identifier	C an..10	**O**		TREM card number according ADR.
C235	HAZARD IDENTIFICATION PLACARD DETAILS	C	**O**		
8158	Orange hazard placard upper part identifier	C an..4	**O**		Danger signs upper part.
8186	Orange hazard placard lower part identifier	C an4	**O**		Danger signs lower part.
C236	DANGEROUS GOODS LABEL	C	**O**		According ADR, FID, IMDG-code, IATA-DGR.
8246	Dangerous goods marking identifier	C an..4	**O**		Number of dangerous goods document primary hazard.
8246	Dangerous goods marking identifier	C an..4	**O**		Number of dangerous goods document secondary hazard.
8246	Dangerous goods marking	C an..4	**O**		

5. Segments Layout

Segment number: 39

		EDIFACT	GS1	*	Description
	identifier				
8255	Packing instruction type code	C an..3	**O**		
8325	Hazardous means of transport category code	C an..3	**O**		Only used by air carrier.
8211	Hazardous cargo transport authorisation code	C an..3	**O**		

Segment Notes:

This segment is used to indicate whether the current line item is dangerous or hazardous. The identification of any relevant regulations concerning dangerous goods is possible in this segment.

Example:
DGS+ADR+3B+1178+21:CEL'
The dangerous goods are classified according to the ADR class 3B (extremely flammable liquid) with the UN number 1178 and a flashpoint of 21 degrees celsius.

5. Segments Layout

Segment number: 40

SG9	- C	999999	-	LIN-PIA-DTM-MEA-HAN-DOC-FTX-PGI-SG10-SG11-SG13-SG15-SG16-SG17-SG18-SG20-SG21-SG23
SG20	- C	10	-	DGS-QTY-FTX
QTY	- C	1	-	Quantity

Function:

To specify a pertinent quantity.

		EDIFACT	GS1	*	Description
C186	QUANTITY DETAILS	M	**M**		
6063	Quantity type code qualifier	M an..3	**M**		23 = Active ingredient
6060	Quantity	M an..35	**M**		
6411	Measurement unit code	C an..3	**D**		This data element is only used if the product being identified is of variable quantity.

Segment Notes:

This segment is used to specify the quantities relevant to the dangerous goods information.

Example:
QTY+23:20:KGM'

5. Segments Layout

Segment number: 41

SG9	- C	999999 -	LIN-PIA-DTM-MEA-HAN-DOC-FTX-PGI-SG10-SG11-SG13-SG15-SG16-SG17-SG18-SG20-SG21-SG23
SG20	- C	10 -	DGS-QTY-FTX
FTX	- C	5 -	Free text

Function:

To provide free form or coded text information.

		EDIFACT	GS1	*	Description
4451	Text subject code qualifier	M an..3	**M**		AAC = Dangerous goods additional information AAD = Dangerous goods, technical name HAN = Handling instructions HAZ = Hazard information PAC = Packing/marking information ZZZ = Mutually defined
4453	Free text function code	C an..3	**O**	*	1 = Text for subsequent use
C107	TEXT REFERENCE	C	**D**		This composite is only used when trading partners have agreed to use mutually defined code values.
4441	Free text value code	M an..17	**M**		
1131	Code list identification code	C an..17	**O**		
3055	Code list responsible agency code	C an..3	**D**		89 = Assigned by distributor 90 = Assigned by manufacturer 91 = Assigned by supplier or supplier's agent 92 = Assigned by buyer or buyer's agent
C108	TEXT LITERAL	C	**D**		This composite is only used if coded text can not be used.
4440	Free text value	M an..512	**M**		
4440	Free text value	C an..512	**O**		
4440	Free text value	C an..512	**O**		
4440	Free text value	C an..512	**O**		
4440	Free text value	C an..512	**O**		
3453	Language name code	C an..3	**D**		ISO 639 two alpha code This data element is only used when non coded free text has been provided in data element C108.
4447	Free text format code	C an..3	**N**		

Segment Notes:

This segment is used to specify any additional free text information required for the dangerous goods.
Use of this segment in free form is not recommended since it may inhibit automatic processing of the Product Data message. Coded references to standard texts is an available functionality which enables automatic processing and reduces transmission overheads. Standard texts should be mutually defined between trading partners and can be used to cover legal or other requirements.

Example:
FTX+AAC+1+992::92'
(Code value 992 = Handle with extreme caution, unstable liquids.)

5. Segments Layout

Segment number: 42

SG9	- C	999999 -	LIN-PIA-DTM-MEA-HAN-DOC-FTX-PGI-SG10-SG11-SG13-SG15-SG16-SG17-SG18-SG20-SG21-SG23
SG21	- C	5 -	PAC-MEA-HAN-PCI
PAC	- M	1 -	Package

Function:

To describe the number and type of packages/physical units.

		EDIFACT	GS1	*	Description
7224	Package quantity	C n..8	**O**		
C531	PACKAGING DETAILS	C	**A**		
7075	Packaging level code	C an..3	**O**		
7233	Packaging related description code	C an..3	**O**		50 = Package barcoded EAN-13 or EAN-8 51 = Package barcoded ITF-14 52 = Package barcoded UCC or EAN-128
7073	Packaging terms and conditions code	C an..3	**O**		
C202	PACKAGE TYPE	C	**O**		
7065	Package type description code	C an..17	**A**		09 = Returnable pallet (GS1 Temporary Code) 201 = Pallet ISO 1 - 1/1 EURO Pallet (GS1 Temporary Code) X11 = Banded package (GS1 Temporary Code)
1131	Code list identification code	C an..17	**O**		
3055	Code list responsible agency code	C an..3	**D**		
7064	Type of packages	C an..35	**O**		
C402	PACKAGE TYPE IDENTIFICATION	C	**N**		
7077	Description format code	M an..3			
7064	Type of packages	M an..35			
7143	Item type identification code	C an..3			
7064	Type of packages	C an..35			
7143	Item type identification code	C an..3			
C532	RETURNABLE PACKAGE DETAILS	C	**N**		
8395	Returnable package freight payment responsibility code	C an..3			
8393	Returnable package load contents code	C an..3			

Segment Notes:

This segment is used to describe the packaging for the currently identified line item.

Example:
PAC+++PK'

5. Segments Layout

Segment number: 43

SG9	- C	999999 -	LIN-PIA-DTM-MEA-HAN-DOC-FTX-PGI-SG10-SG11-SG13-SG15-SG16-SG17-SG18-SG20-SG21-SG23
SG21	- C	5 -	PAC-MEA-HAN-PCI
MEA	- C	10 -	Measurements

Function:

To specify physical measurements, including dimension tolerances, weights and counts.

		EDIFACT	GS1	*	Description
6311	Measurement purpose code qualifier	M an..3	**M**		PD = Physical dimensions (product ordered)
C502	MEASUREMENT DETAILS	C	**A**		
6313	Measured attribute code	C an..3	**A**		AAC = Total net weight AAD = Total gross weight HT = Height dimension LN = Length dimension TH = Thickness
6321	Measurement significance code	C an..3	**O**		3 = Approximately 4 = Equal to
6155	Non-discrete measurement name code	C an..17	**N**		
6154	Non-discrete measurement name	C an..70	**N**		
C174	VALUE/RANGE	C	**R**		
6411	Measurement unit code	M an..3	**M**		
6314	Measurement value	C an..18	**O**		
6162	Range minimum value	C n..18	**O**		
6152	Range maximum value	C n..18	**O**		
6432	Significant digits quantity	C n..2	**N**		
7383	Surface or layer code	C an..3	**N**		

Segment Notes:

This segment is used to provide measurements relevant to the packaging unit identified in the PAC segment.

Example:
MEA+PD+HT+MTR:0.08'
MEA+PD+WD+MTR:0.08'
MEA+PD+LN+MTR:0.08'

5. Segments Layout

Segment number: 44

SG9	- C	999999 -	LIN-PIA-DTM-MEA-HAN-DOC-FTX-PGI-SG10-SG11-SG13-SG15-SG16-SG17-SG18-SG20-SG21-SG23
SG21	- C	5 -	PAC-MEA-HAN-PCI
HAN	- C	5 -	Handling instructions

Function:

To specify handling and where necessary, notify hazards.

		EDIFACT	GS1	*	Description
C524	HANDLING INSTRUCTIONS	C	**O**		
4079	Handling instruction description code	C an..3	**O**		BIG = Outsized (GS1 Temporary Code) CRU = Crushable (GS1 Temporary Code) EAT = Foodstuffs (GS1 Temporary Code) HWC = Handle with care (GS1 Temporary Code) STR = Stacking restricted (GS1 Temporary Code) UST = Unstackable (GS1 Temporary Code)
1131	Code list identification code	C an..17	**N**		
3055	Code list responsible agency code	C an..3	**D**	*	9 = GS1 This data element is only used when GS1 codes, i.e. CRU, UST, HWC, etc, are used in data element 4079.
4078	Handling instruction description	C an..70	**O**		
C218	HAZARDOUS MATERIAL	C	**O**		
7419	Hazardous material category name code	C an..7	**D**		The preferred way to provide 'ADR international classification' or 'Hazardous material standard text' is to use DE 1131.
1131	Code list identification code	C an..17	**O**		
3055	Code list responsible agency code	C an..3	**D**		
7418	Hazardous material category name	C an..35	**O**		To be used when no code value is available for DE7419.

Segment Notes:

This segment is used to provide handling instructions relevant to the packaging unit described in the PAC segment.

Example:
HAN+CRU::9'

5. Segments Layout

Segment number: 45

SG9	- C	999999 -	LIN-PIA-DTM-MEA-HAN-DOC-FTX-PGI-SG10-SG11-SG13-SG15-SG16-SG17-SG18-SG20-SG21-SG23
SG21	- C	5 -	PAC-MEA-HAN-PCI
PCI	- C	5 -	Package identification

Function:

To specify markings and labels on individual packages or physical units.

		EDIFACT	GS1	*	Description
4233	Marking instructions code	C an..3	**O**		39 = Marked with Serial Shipping Container Code (SSCC)
C210	MARKS & LABELS	C	**O**		
7102	Shipping marks description	M an..35	**M**		
7102	Shipping marks description	C an..35	**O**		
7102	Shipping marks description	C an..35	**O**		
7102	Shipping marks description	C an..35	**O**		
7102	Shipping marks description	C an..35	**O**		
7102	Shipping marks description	C an..35	**O**		
7102	Shipping marks description	C an..35	**O**		
7102	Shipping marks description	C an..35	**O**		
7102	Shipping marks description	C an..35	**O**		
7102	Shipping marks description	C an..35	**O**		
8275	Container or package contents indicator code	C an..3	**N**		
C827	TYPE OF MARKING	C	**N**		
7511	Marking type code	M an..3			
1131	Code list identification code	C an..17			
3055	Code list responsible agency code	C an..3			

Segment Notes:

This segment is used to specify what marks and labels will appear on the packaging identified in the PAC segment.

Example:
PCI+39'

5. Segments Layout

Segment number: 46

SG9	- C	999999 -	LIN-PIA-DTM-MEA-HAN-DOC-FTX-PGI-SG10-SG11-SG13-SG15-SG16-SG17-SG18-SG20-SG21-SG23
SG23	- C	999999 -	HYN-PIA-QTY-SG25
HYN	- M	1 -	Hierarchy information

Function:

A segment to identify hierarchical connections from a given item to a higher or lower levelled item or to identify dependencies among the content of hierarchically related groups of data.

		EDIFACT	GS1	*	Description
7173	Hierarchy object code qualifier	M an..3	**M**		2 = Product 33 = Associated accessory
7171	Hierarchical structure relationship code	C an..3	**R**		1 = Parent 2 = Child This data element is used to indicate whether the item number (DE 7140) specified in this segment is a parent or child product of the current line item.
1229	Action request/notification description code	C an..3	**A**		
C212	ITEM NUMBER IDENTIFICATION	C	**R**		
7140	Item identifier	C an..35	**R**		
7143	Item type identification code	C an..3	**R**		AC = HIBC (Health Industry Bar Code) IB = ISBN (International Standard Book Number) IN = Buyer's item number PV = Promotional variant number SA = Supplier's article number SRV = GS1 Global Trade Item Number
1131	Code list identification code	C an..17	**O**		
3055	Code list responsible agency code	C an..3	**D**		9 = GS1 91 = Assigned by supplier or supplier's agent 92 = Assigned by buyer or buyer's agent
7166	Hierarchical structure parent identifier	C an..35	**N**		

Segment Notes:

This segment is used to provide hierarchical product information related to the current line item.

Example:
HYN+2+2++5410013111009:SRV'
This example indicates that the GTIN 5410013111009 is a child in the product hierarchy to the GTIN 5412345123453 identified in the LIN segment.

5. Segments Layout

Segment number: 47

SG9	- C	999999 -	LIN-PIA-DTM-MEA-HAN-DOC-FTX-PGI-SG10-SG11-SG13-SG15-SG16-SG17-SG18-SG20-SG21-SG23
SG23	- C	999999 -	HYN-PIA-QTY-SG25
PIA	- C	10 -	Additional product id

Function:

To specify additional or substitutional item identification codes.

		EDIFACT	GS1	*	Description
4347	Product identifier code qualifier	M an..3	**M**		1 = Additional identification
C212	ITEM NUMBER IDENTIFICATION	M	**M**		
7140	Item identifier	C an..35	**R**		
7143	Item type identification code	C an..3	**R**		PV = Promotional variant number
1131	Code list identification code	C an..17	**O**		
3055	Code list responsible agency code	C an..3	**D**		
C212	ITEM NUMBER IDENTIFICATION	C	**O**		
7140	Item identifier	C an..35	**R**		
7143	Item type identification code	C an..3	**R**		
1131	Code list identification code	C an..17	**O**		
3055	Code list responsible agency code	C an..3	**D**		
C212	ITEM NUMBER IDENTIFICATION	C	**O**		
7140	Item identifier	C an..35	**R**		
7143	Item type identification code	C an..3	**R**		
1131	Code list identification code	C an..17	**O**		
3055	Code list responsible agency code	C an..3	**D**		
C212	ITEM NUMBER IDENTIFICATION	C	**O**		
7140	Item identifier	C an..35	**R**		
7143	Item type identification code	C an..3	**R**		
1131	Code list identification code	C an..17	**O**		
3055	Code list responsible agency code	C an..3	**D**		
C212	ITEM NUMBER IDENTIFICATION	C	**O**		
7140	Item identifier	C an..35	**R**		
7143	Item type identification code	C an..3	**R**		
1131	Code list identification code	C an..17	**O**		
3055	Code list responsible agency code	C an..3	**D**		

Segment Notes:

5. Segments Layout

Segment number: 47

This segment is used to provide a promotional variant number which is part of the identification of a product.

Example:
PIA+1+4711XX:PV::91'

5. Segments Layout

Segment number: 48

SG9	- C	999999	-	LIN-PIA-DTM-MEA-HAN-DOC-FTX-PGI-SG10-SG11-SG13-SG15-SG16-SG17-SG18-SG20-SG21-SG23
SG23	- C	999999	-	HYN-PIA-QTY-SG25
QTY	- C	5	-	Quantity

Function:

To specify a pertinent quantity.

		EDIFACT	GS1	*	Description
C186	QUANTITY DETAILS	M	**M**		
6063	Quantity type code qualifier	M an..3	**M**		17E = Number of units in lower packaging or configuration level (GS1 Temporary Code)
6060	Quantity	M an..35	**M**		
6411	Measurement unit code	C an..3	**D**		This data element is only used if the product being identified is of variable quantity.

Segment Notes:

This segment is used to specify quantity information related to the current hierarchical product.

Example:
QTY+17E:48'

5. Segments Layout

Segment number: 49

SG9	- C	999999 -	LIN-PIA-DTM-MEA-HAN-DOC-FTX-PGI-SG10-SG11-SG13-SG15-SG16-SG17-SG18-SG20-SG21-SG23
SG23	- C	999999 -	HYN-PIA-QTY-SG25
SG25	- C	99 -	CCI-CAV-MEA
CCI	- M	1 -	Characteristic/class id

Function:

To identify and describe a specific characteristic and its relevance for subsequent business processes.

		EDIFACT	GS1	*	Description
7059	Class type code	C an..3	**O**		11 = Product
C502	MEASUREMENT DETAILS	C	**N**		
6313	Measured attribute code	C an..3	**O**		
6321	Measurement significance code	C an..3			
6155	Non-discrete measurement name code	C an..17			
6154	Non-discrete measurement name	C an..70			
C240	PRODUCT CHARACTERISTIC	C	**O**		
7037	Characteristic description code	M an..17	**M**		This data element is used to identify the characteristics of the currently identified hierarchy in user coded form. As no EDIFACT code list exists for this data element codes should be from the EANCOM code list or be allocated depending on the requirements of the user. Should it not be possible to provide a user code in this data element and a free form characteristic description is used in data element 7036, then it is recommended that the code value 'ZZZ' be put in data element 7037 (which is mandatory).
1131	Code list identification code	C an..17	**O**		
3055	Code list responsible agency code	C an..3	**D**		9 = GS1 60 = Assigned by national trade agency 91 = Assigned by supplier or supplier's agent 92 = Assigned by buyer or buyer's agent
7036	Characteristic description	C an..35	**O**		This data element is used to provide free form text characteristics for use where no coded values exist in data element 7037.
7036	Characteristic description	C an..35	**O**		
4051	Characteristic relevance code	C an..3	**N**		

Segment Notes:

This segment is used to specify characteristics related to the currently identified hierarchy.

Example:
CCI+11++386::91'
This example indicates that the characteristic being identified is identified by the supplier assigned code value 386 (e.g. a computer system control board).

5. Segments Layout

Segment number: 50

SG9	- C	999999 -	LIN-PIA-DTM-MEA-HAN-DOC-FTX-PGI-SG10-SG11-SG13-SG15-SG16-SG17-SG18-SG20-SG21-SG23
SG23	- C	999999 -	HYN-PIA-QTY-SG25
SG25	- C	99 -	CCI-CAV-MEA
CAV	- C	10 -	Characteristic value

Function:

To provide the value of a characteristic.

		EDIFACT	GS1	*	Description
C889	CHARACTERISTIC VALUE	M	**M**		
7111	Characteristic value description code	C an..3	**A**		This data element is used to provide characteristic values. As no EDIFACT code list exists for this data element codes should be allocated depending on the requirements of the user.
1131	Code list identification code	C an..17	**O**		
3055	Code list responsible agency code	C an..3	**D**		9 = GS1 60 = Assigned by national trade agency 91 = Assigned by supplier or supplier's agent 92 = Assigned by buyer or buyer's agent
7110	Characteristic value description	C an..35	**O**		
7110	Characteristic value description	C an..35	**O**		

Segment Notes:

This segment is used to further specify characteristic for the current hierarchy.

Example:
CAV+22::91'
When used in combination with the CCI segment example, the supplier code 22 indicates the fact that there is a 386 chip in the system control board.

5. Segments Layout

Segment number: 51

SG9	- C	999999 -	LIN-PIA-DTM-MEA-HAN-DOC-FTX-PGI-SG10-SG11-SG13-SG15-SG16-SG17-SG18-SG20-SG21-SG23
SG23	- C	999999 -	HYN-PIA-QTY-SG25
SG25	- C	99 -	CCI-CAV-MEA
MEA	- C	10 -	Measurements

Function:

To specify physical measurements, including dimension tolerances, weights and counts.

		EDIFACT	GS1	*	Description
6311	Measurement purpose code qualifier	M an..3	**M**		PD = Physical dimensions (product ordered) SV = Specification value
C502	MEASUREMENT DETAILS	C	**A**		
6313	Measured attribute code	C an..3	**A**		AAA = Unit net weight DI = Diameter DP = Depth HT = Height dimension LN = Length dimension TH = Thickness
6321	Measurement significance code	C an..3	**O**		3 = Approximately 4 = Equal to
6155	Non-discrete measurement name code	C an..17	**O**		
6154	Non-discrete measurement name	C an..70	**N**		
C174	VALUE/RANGE	C	**R**		
6411	Measurement unit code	M an..3	**M**		
6314	Measurement value	C an..18	**O**		
6162	Range minimum value	C n..18	**O**		
6152	Range maximum value	C n..18	**O**		
6432	Significant digits quantity	C n..2	**N**		
7383	Surface or layer code	C an..3	**N**		

Segment Notes:

This segment is used to specify any measurements related to the currently identified hierarchy characteristic class.

Example:
MEA+PD+LN:4+MTR:8'

5. Segments Layout

Segment number: 52

UNT - M 1 - Message trailer

Function:

To end and check the completeness of a message.

Notes:
1. 0062, the value shall be identical to the value in 0062 in the corresponding UNH segment.

		EDIFACT	GS1	*	Description
0074	Number of segments in a message	M n..10	**M**		The total number of segments in the message is specified here.
0062	Message reference number	M an..14	**M**		The message reference numbered detailed here should equal the one specified in the UNH segment.

Segment Notes:

This segment is a mandatory UN/EDIFACT segment. It must always be the last segment in the message.

Example:
UNT+60+ME000001'

5. Segments Layout

Segment number: 53

UNZ	- M	1 - Interchange trailer

Function:

To end and check the completeness of an interchange.

Notes:
1. 0020, the value shall be identical to the value in 0020 in the corresponding UNB segment.

		EDIFACT	GS1	*	Description
0036	Interchange control count	M n..6	**M**		Number of messages or functional groups within an interchange.
0020	Interchange control reference	M an..14	**M**		Identical to DE 0020 in UNB segment.

Segment Notes:

This segment is used to provide the trailer of an interchange.
DE 0036: If functional groups are used, this is the number of functional groups within the interchange. If functional groups are not used, this is the number of messages within the interchange.
UNZ+5+12345555'

6. Examples

Example 1

The following is an example of a product data message sent from a supplier identified by GLN 5412345123453 to a buyer identified by GLN 5411111123451. The message is dated the 30th of June 2002 and has the message reference PD3212. The price/sales catalogue message 12332 of the 30th of June 2002 is quoted as an additional reference for the complete message.

The supplier is providing details of a book case which is identified by GTIN 4000862141404. The lead time for production and delivery of the book case is specified as being three weeks. A certificate of origin is available for the product should it be required. The manufacturer of the book case is identified using GLN 5422331123459.

The book case has the physical dimensions of two metres high by one metre wide and it should be handled with care. The book case is described as a classic style finished in varnish. The main characteristics of the product is defined using a code assigned by the supplier, the code 6 (in the CCI segment) indicate the characteristic as being the wood type. The attributes of the characteristic are also identified using supplier assigned codes (in the CAV segment), the code 40 to indicate pine, and the code 25 to indicate varnish.

The shelf type, and quantity, which are to go into the book case are also identified as a product hierarchy of the main book case. Four shelves with GTIN 4012345000009 are required for the book case. The measurements for the shelf are provided for confirmation purposes along with the characteristics. The only difference in the characteristics is that the wood type to be used for the shelves is deal indicated by the code 41 in the CAV segment, not pine as used in the main book case.

UNH+1+PRODAT:D:01B:UN:EAN004'	Message header
BGM+289+PD3212+2'	Product data number PD3212
DTM+137:20020630:102'	Message date 30th June 2002
RFF+PL:12332'	Related to price list number 12332
DTM+171:20020630:102'	Price list date 30th of June 2002
NAD+SU+5412345123453::9'	Supplier is identified by GLN 5412345123453
NAD+BY+5411111123451::9'	Buyer is identified by GLN 5411111123451
LIN+1++4000862141404:SRV'	Product is identified by GTIN 4000862141404
DTM+169:3:803'	Product lead time is 3 weeks
MEA+PD+HT+MTR:2'	Product height is 2 metres
MEA+PD+LN+MTR:1'	Product length is 1 metre
MEA+PD+WD+MTR:0.5'	Product width is .50 metres
HAN+HWC::9'	The product should be handled with care
DOC+861'	A certificate of origin exists for the product
IMD+F+DSC::9+:::BOOK CASE'	The consumer unit’s description : a book case
IMD+F+STE::9+:::CLASSIC'	The product style description is classic
IMD+F+4+:::VARNISH'	The product finish is varnish
IMD+C++CU::9’	The product is a consumer unit
QTY+1:1'	Description applies to one unit of the product
CCI+11++6::91'	The product characteristic type being described is wood type

CAV+40::91'	The characteristic value is pine
CAV+25::91'	The characteristic value is varnish
NAD+MF+5422331123459::9'	The manufacturer is identified by GLN 5422331123459
HYN+2+2++4012345000009:SRV'	The product 4012345000009 is a child of the product identified by GTIN 4000862141404 in the LIN segment
QTY+45E:4'	Number of units of child contained in parent is 4
CCI+11++ZZZ:::SHELF'	Characteristic of the child product is shelf
CAV+:::VARNISH'	The characteristic value is varnish
MEA+PD+LN+MTR:1'	Shelf length 1 metre
MEA+PD+WD+MTR:0.5'	Shelf width .50 metres
MEA+PD+TH+MTR:0.08'	Shelf thickness .08 metres
CCI+11++6::91'	The product characteristic type being described is wood type
CAV+41::91'	The characteristic value is deal
CAV+25::91'	The characteristic value is varnish
UNT+34+1'	Total number of segments in the message equals 34

Example 2

The following is an example of a product data message sent from a supplier identified by GLN 5071615111110 to a buyer identified by GLN 5098765111111. The message is dated the 30th of June 2001 and has the message reference 7412.

The message lists the ingredients for a 250 gram Dundee cake which is identified by GTIN 5412345111115 and the suppliers article number 6124.

The characteristics of the product are defined as being of a shape which is round the packaging, measurements and handling instructions for the cake are also provided.

Line number 15 of the price/sales catalogue message 128 is quoted as a reference to the price for the line item.

The ingredients of the cake and the quantity of each are identified as being child products of the primary product previously identified by means of GTIN 5412345111115 and are listed as being raisins, flour, and sugar GTINs are included for all the ingredients.

UNH+1+PRODAT:D:01B:UN:EAN004'	Message header
BGM+289+7412+2'	Product data number 7412
DTM+137:20010630:102'	Message date 30th June 2001
NAD+SU+5071615111110::9'	Supplier is identified by GLN 5071615111110
NAD+BY+5098765111111::9'	Buyer is identified by GLN 5098765111111
LIN+1++5412345111115:SRV'	Product is identified by GTIN 5412345111115 (parent)
PIA+1+6124:SA'	Suppliers article number 6142 is provided as an additional identification

MEA+PD+AAA+GRM:250'	
HAN+EAT::9'	Product is foodstuffs
IMD+F++::9:DUNDEE CAKE'	Product description
IMD+C++CU::9’	The product is a consumer unit
QTY+1:1'	Description relates to one product
QTY+17E:215:GRM"	Total of 215 grams in all child products related to this parent
CCI+11++ZZZ:::SHAPE'	Product characteristic is shape
CAV+40:::ROUND'	Characteristic value is round
RFF+PL:128:15'	Relationship with price list number 128, line 15
PAC+1++BX'	Product is packaged in a box
MEA+PD+LN+MTR:0.1'	Box length is 0.10 metres
MEA+PD+WD+MTR:0.1'	Box width is 0.10 metres
MEA+PD+HT+MTR:0.05'	Box height is 0.05 metres
HYN+2+2++4000862141404:SRV’	The current product is a child of the product identified by GTIN 5412345111115
QTY+45E:25:GRM'	Number of child units contained in parent equals 25 grams
CCI+11++ZZZ:::RAISIN'	Product characteristic is raisin
HYN+2+2++5412345000105:SRV’	The current product is a child of the product identified by GTIN 5412345111115
QTY+45E:150:GRM'	Number of child units contained in parent equals 150 grams
CCI+11++ZZZ:::FLOUR'	Product characteristic is flour
HYN+2+2++5410738000169:SRV'	The current product is a child of the product identified by GTIN 5412345111115
QTY+45E:40:GRM'	Number of child units contained in parent equals 40 grams
CCI+11++ZZZ:::SUGAR'	Product characteristic is sugar
UNT+30+1'	Total number of segments in the message equals 30

Example 3

The following is an example of a product data message sent from a supplier identified by GLN 5422331123459 to a buyer identified by GLN 5432154111113. The message is dated the 30th of June 2002 and has the message reference 201.

The message contains details regarding a mans suit identified by GTIN 5410738000169, made up of a jacket and trousers. The lead time on an order is indicated as being two weeks. The handling instructions for the suit indicate that it is a hanging garment A minimum order quantity of 10 is indicated.

The suit is described as being a dark grey double breasted Gouchon. It is available in sizes small, medium and large and certificates of quality are available. The product characteristic is identified as being the material as defined by the suppliers code MAT in the CCI segment. The material is further characterised by an indication that it is made

up of 30% wool and 20% polyester. The characteristics wool and polyester are identified using the suppliers codes WO and PL respectively in the CAV segment. The percentages of each characteristic are provided in the MEA segment.

The parts of the suit are identified as child products of the main line. The jacket is identified by GTIN 5410738000176 while the trousers are identified with GTIN 5410738000183. For each suit there is one jacket and one pair of trousers.

UNH+1+PRODAT:D:01B:UN:EAN004'	Message header
BGM+289+201+2'	Product data number 201
DTM+137:20020630:102'	Message date 30th of June 2002
NAD+SU+5422331123459::9'	Supplier identified by GLN 5422331123459
NAD+BY+5432154111113::9'	Buyer is identified by GLN 5432154111113
LIN+1++5410738000169:SRV'	Product is identified by GTIN 5410738000169
DTM+169:2:803'	Lead time for the product is 2 weeks
HAN+HGA::9'	The product is an hanging garment
DOC+3'	There is a certificate of quality available for this product
IMD+F+DSC::9+:::GOUCHON SUIT'	Description of the consumer unit
IMD+C++CU::9’	The product is a consumer unit
IMD+F+STE::9+::9:DOUBLE BREASTED'	Description of the style
IMD+F+35+:::DARK GREY'	Description of the colour
IMD+F+98+:::SMALL'	Description of the available sizes
IMD+F+98+:::MEDIUM'	Description of the available sizes
IMD+F+98+:::LARGE'	Description of the available sizes
QTY+53:10'	Minimum order quantity 10
QTY+17E:2'	Total of child product quantities contained in parent
CCI+11++MAT::91'	Product characteristic material
CAV+WO::91'	The characteristic value of wool
MEA+SV++P1:80'	Specification value 80%
CCI+11++MAT::91'	Product characteristic material
CAV+PL::91'	The characteristic value of polyester
MEA+SV++P1:20'	Specification value 20%
HYN+2+2++5410738000176:SRV'	The current product is a child of the product identified by GTIN 5410738000169
QTY+45E:1'	One child product contained in parent product
CCI+11++ZZZ:::GOUCHON JACKET'	Product characteristic Gouchon Jacket
HYN+2+2++5410738000183:SRV'	The current product is a child of the product identified by GTIN 5410738000169

6. Examples

QTY+45E:1'	One child product contained in parent product
CCI+11++ZZZ:::GOUCHON TROUSERS'	Product characteristic Gouchon trousers
UNT+31+1'	Total number of segments in the message equals 31

Note:
The EDI interchange will include the UNB..UNZ segments and, if applicable, the UNG..UNE segments. (See part 1 section 5.7).